PB92-910403
NTSB/AAR-92/03

NATIONAL TRANSPORTATION SAFETY BOARD

WASHINGTON, D.C. 20594

AIRCRAFT ACCIDENT REPORT

ATLANTIC SOUTHEAST AIRLINES, INC., FLIGHT 2311
UNCONTROLLED COLLISION WITH TERRAIN
AN EMBRAER EMB-120, **N270AS**
BRUNSWICK, GEORGIA
APRIL 5, 1991

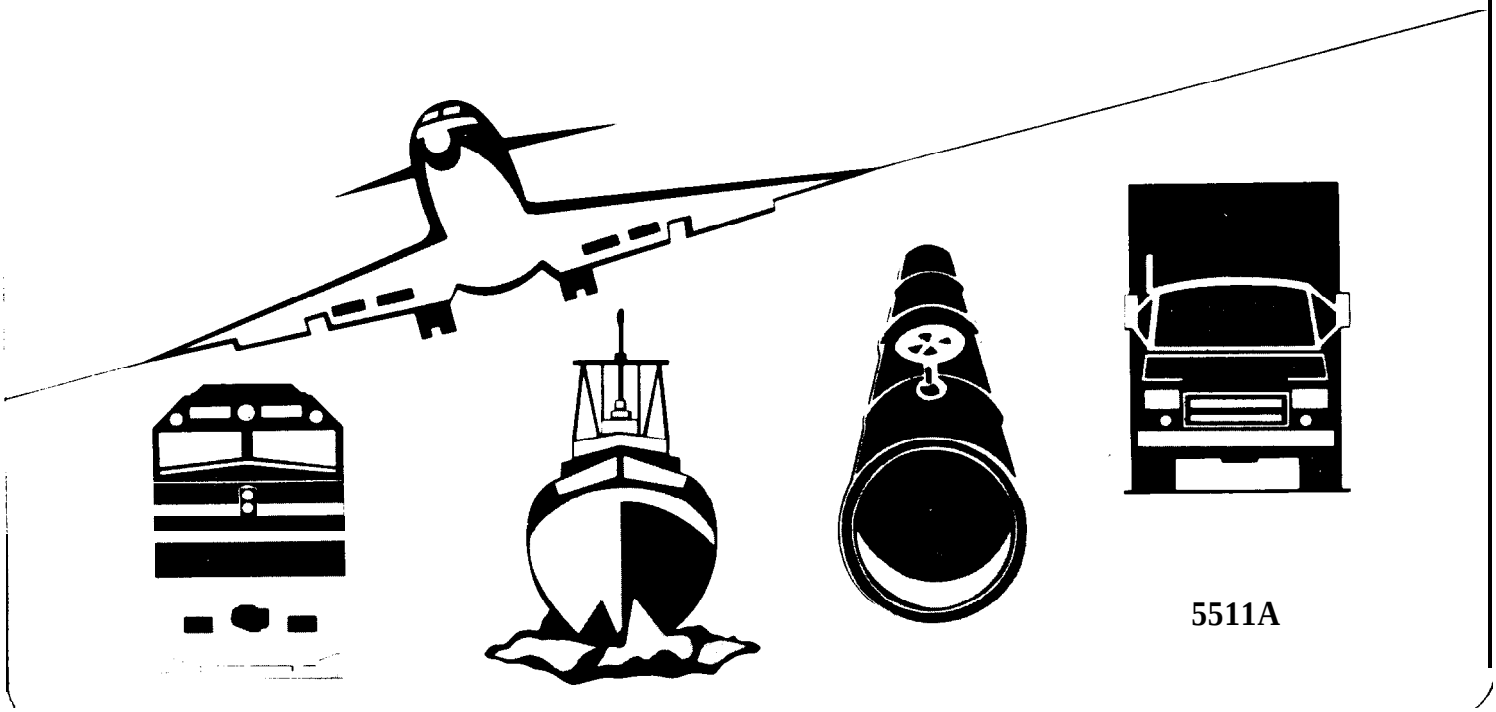

5511A

The National Transportation Safety Board is an independent Federal agency dedicated to promoting aviation, railroad, highway, marine, pipeline, and hazardous materials safety. Established in 1967, the agency is mandated by Congress through the Independent Safety Board Act of 1974 to investigate transportation accidents, determine the probable causes of the accidents, issue safety recommendations, study transportation safety issues, and evaluate the safety effectiveness of government agencies involved in transportation. The Safety Board makes public its actions and decisions through accident reports, safety studies, special investigation reports, safety recommendations, and statistical reviews.

Information about available publications may be obtained by contacting:

National Transportation Safety Board
Public Inquiries Section, RE-51
490 L'Enfant Plaza, S.W.
Washington, D.C. 20594
(202)382-6735

Safety Board publications may be purchased, by individual copy or by subscription, from:

National Technical Information Service
5285 Port Royal Road
Springfield, Virginia 22161
(703)487-4600

ENTERED JUL 3 0 1992

NTSBIAAR-92103 PB92-910403

NATIONAL TRANSPORTATION SAFETY BOARD

WASHINGTON, D.C. 20594

AIRCRAFT ACCIDENT REPORT

ATLANTIC SOUTHEAST AIRLINES, INC., FLIGHT 2311
UNCONTROLLED COLLISION WITH TERRAIN
AN EMBRAER EMB-120, N270AS
BRUNSWICK, GEORGIA
APRIL 5, 1991

Adopted: April 28, 1992
Notation 5511A

Abstract: This report explains the loss of control in flight and crash of Atlantic Southeast Airlines, Inc., Flight 2311, while the airplane was conducting a landing approach to runway 07 at the Glynco Jetport, Brunswick, Georgia. The safety issues discussed in this report include the certification and inspection requirements for the Hamilton Standard model 14RF and other model propeller systems, and the scheduling of reduced flightcrew rest periods that are beyond the intent of Federal regulations. Safety recommendations concerning these issues were made to the Federal Aviation Administration, Atlantic Southeast Airlines, Inc., and the Regional Airline Association.

CONTENTS

	EXECUTIVE SUMMARY	v
1.	**FACTUAL INFORMATION**	
1.1	History of the Flight	1
1.2	Injuries to Persons	3
1.3	Damage to Aircraft	3
1.4	Other Damage	3
1.5	Personnel Information	5
1.6	Aircraft Information	6
1.7	Meteorological Information	7
1.8	Aids to Navigation	7
1.9	Communications	7
1.10	Aerodrome Information	7
1.11	Flight Recorders	8
1.12	Wreckage and Impact Information	8
1.13	Medical and Pathological Information	9
1.14	Fire	9
1.15	Survival Aspects	9
1.16	Tests and Research	10
1.16.1	Airplane Systems	10
1.16.2	Engine and Propeller Inspections	11
1.16.3	Propeller System Static Testing	14
1.16.4	Propeller System Flight Tests	16
1.16.5	Flight Simulator Tests	18
1.17	Other Information	22
1.17.1	Hamilton Standard Alert Service Bulletin	22
1.17.2	Transfer Tube Finish Change	24
1.17.3	Propeller Control Unit Servo Ballscrew Wear	27
1.17.4	Flightcrew Scheduling	28
2.	**ANALYSIS**	
2.1	General	30
2.2	Propeller System Components	31
2.3	Loss of Propeller Control	33
2.4	Flightcrew and Airplane Performance	34
2.5	Propeller System Certification	37
2.6	Flightcrew Duty Time	39

3. CONCLUSIONS
3.1 Findings 40
3.2 Probable Cause 42

4. RECOMMENDATIONS 43

EXECUTIVE SUMMARY

On April 5, 1991, Atlantic Southeast Airlines, Inc., flight 2311, an Embraer EMB-120, N270AS, crashed during a landing approach to runway 07 at the Glynco Jetport, Brunswick, Georgia. The flight was a scheduled commuter flight from Atlanta to Brunswick, Georgia, and was being conducted under instrument flight rules. The airplane was operating in visual meteorological conditions at the time of the accident. The aircraft was destroyed; and the two pilots, the flight attendant, and all 20 passengers received fatal injuries.

Flight 23 11 was cleared for a visual approach to Glynco Jetport a few minutes before the accident. Witnesses reported that as the airplane approached the airport, it suddenly turned or rolled to the left until the wings were perpendicular to the ground. The airplane then fell in a nose-down attitude and disappeared out of sight behind the trees.

Examinations of the left propeller components indicated a propeller blade angle of about 3 degrees at impact while the left propeller control unit ballscrew position was consistent with a commanded a blade angle of 79.2 degrees. The discrepancy between the actual propeller blade angle and the angle commanded screw is a strong indication that there was a discrepancy inside the propeller control unit prior to impact and that the left propeller had achieved an uncommanded low blade angle.

The discrepancy in the propeller control unit was found to have been extreme wear on the propeller control unit quill spline teeth which normally engaged the titanium-nitrided splines of the propeller transfer tube. It was found that the titanium-nitrided surface was much harder and rougher than the nitrided surface of the quill. Therefore, the transfer tube splines acted like a file and caused abnormal wear of the gear teeth on the quill. The investigation found that wear of the quill was not considered during the certification of the propeller system.

The investigation revealed crew rest practices that may be detrimental to crew performance although they probably had no bearing in the cause of this accident.

The National Transportation Safety Board determines that the probable cause of this accident was the loss of control in flight as a result of a malfunction of the left engine propeller control unit which allowed the propeller blade angles to go below the flight idle position. Contributing to the accident was

the deficient design of the propeller control unit by Hamilton Standard and the approval of the design by the Federal Aviation Administration. The design did not correctly evaluate the failure mode that occurred during this flight, which resulted in an uncommanded and uncorrectable movement of the blades of the airplane's left propeller below the flight idle position.

As a result of its investigation of this accident, the Safety Board made four recommendations to the Federal Aviation Administration pertaining to the certification of propeller systems, the recertification and the need to establish periodic inspection requirements for the Hamilton Standard model 14RF propellers, and regarding the flightcrew reduced rest provisions contained in 14 CFR section 135.265. In addition, the Safety Board made a recommendation to Atlantic Southeast Airlines, Inc., and the Regional Airlines Association urging them to discontinue scheduling reduced rest for flightcrews.

NATIONAL TRANSPORTATION SAFETY BOARD
WASHINGTON, D.C. 20594

AIRCRAFT ACCIDENT REPORT

ATLANTIC SOUTHEAST AIRLINES, INC., FLIGHT 2311
UNCONTROLLED COLLISION WITH TERRAIN
AN EMBRAER EMB-120, N270AS
BRUNSWICK, GEORGIA
APRIL 5, 1991

1. FACTUAL INFORMATION

1.1 History of the Flight

On April 5, 1991, Atlantic Southeast Airlines (ASA), Inc., flight 2311, an Empresa Brasileria de Aeronautica S.A. (Embraer) crashed during a landing approach to runway 07 at the Glynco Jetport, Brunswick, Georgia. The accident occurred at about 1451 eastern standard time. The flight was a scheduled passenger flight from Atlanta to Brunswick, Georgia, operating under the provisions of Title 14 Code of Federal Regulations (CFR) Part 135. The flight was operated in accordance with an instrument flight rules (IFR) flight plan, as required by the airline's procedures. The two pilots, the flight attendant, and all 20 passengers received fatal injuries. The airplane was destroyed by impact and postcrash fire.

The crew of flight 2311 began their sequence of trips on flight 2284 about 13 19 on April 4, 1991, on a round-trip flight from Atlanta to Tallahassee, Florida. The airplane returned to Atlanta at approximately 1559. A subsequent round-trip flight to Panama City, Florida, was flown, and the crew completed their duty day with flight 2173 arriving at Dothan, Alabama, at 2141. The flightcrew checked into their hotel about 2245.

On the morning of the accident, the captain and the first officer received the wake-up calls that they had requested at 0515 and 0530, respectively. They arrived at the airport by taxi about 0615. The taxi cab driver reported that the crew was in good spirits and readily engaged in conversation. The crew resumed their assigned flight sequence at 0645 on April 5 with flight 2101 returning to Atlanta. They then flew a round trip to Montgomery, Alabama, and returned to

Atlanta at 1042 on flight 2238. At this time, they began a scheduled break of 2 hours and 37 minutes. Other ASA employees who talked with the two pilots during this rest period reported that they appeared to be well rested and in good spirits.

Flight 23 11 was scheduled initially for airplane N228AS to depart at 1324. However, because of mechanical problems, an airplane change was made to N270AS, at approximately 1307. As a result, flight 23 11 departed Atlanta at 1347. This was the fourth flight of the day for N270AS. No problems were noted by the flightcrews on the previous flights. The flight deviated around weather while en route to Brunswick and arrived in the Brunswick area about 1444. At 1448:10, the flight acknowledged to Jacksonville air route traffic control center that the airport was in sight, and flight 23 11 was subsequently cleared for a visual approach. The crew acknowledged the clearance at 1448:21. The ASA manager at the airport reported that the flight made an "in-range call" on the company radio frequency and that the pilot gave no indication that the flight had any mechanical problems; that transmission was the last one known from flight 23 11.

Witnesses reported seeing the airplane approaching the airport in visual meteorological conditions at a much lower than normal altitude. Several witnesses estimated that the airplane flew over them at an altitude of 100 to 200 feet above the ground. The majority of the witnesses reported that the airplane suddenly turned or rolled to the left until the wings were perpendicular to the ground. The airplane then descended in a nose-down attitude and disappeared from sight behind trees. Only one witness reported seeing a puff of smoke prior to or subsequent to the airplane rolling to the left. Some witnesses reported loud engine noises described as a squeal, whine, or an overspeeding or accelerating engine during the last moments of the flight. They further stated that these noises diminished or ceased before impact.

An Airline Transport Pilot (ATP) observed the flight from a distance of 2 to 3 miles as he drove along state Route 25 west, southwest of the airport. He said that he saw the airplane in normal flight at normal altitudes, proceeding on a left downwind approach to runway 07, and then turning an "Arc" from the base leg towards the final approach path in about a 20-degree bank and a gradual descent. He believed that the approach was normal. The airplane completed a 180-degree turn from the downwind leg of the approach and continued the turn. He observed the airplane pitch up about 5 degrees, then roll left until the wings were vertical. The airplane then nosed down into the ground. He saw no fire or smoke during the flight and he believed both propellers were rotating.

Company personnel who listened to the air traffic control tape reported that all of the communications were being made by the first officer. By company practice, this would indicate that the captain was flying the airplane.

Air traffic control radar data were plotted to show the flightpath of flight 2311 for the last 5 minutes of radar coverage. (See figure 1). The radar antenna beam is limited by line-of-sight. Therefore, because of the distance to the accident location and the geometry of the radar antenna coverage, the last recorded and lowest possible radar data in the accident area is about 2,300 feet above the ground. The interpretation of the radar data, using the anticipated winds aloft, indicates that at the time of the last radar return the airplane's indicated airspeed had decreased to 150 knots and that the airplane was on a heading of about 117 degrees magnetic.

The accident occurred about 1451 during the hours of daylight, at 31° 15' 34.8" north latitude and 81° 30' 34.2" west longitude. The bearing and distance from the accident site to the threshold of runway 07 was 100 degrees and about 9,975 feet, respectively.

1.2 Injuries to Persons

Injuries	Crew	Passengers	Others	Total
Fatal	3	20	0	23
Serious	0	0	0	0
Minor	0	0	0	0
None	0	0	0	0
Total	3	20	0	23

1.3 Damage to Aircraft

The airplane was destroyed by impact and postcrash fire. The value of the airplane was estimated at $7.8 million.

1.4 Other Damage

Several trees and vegetation in the area of the crash were destroyed by the impact and the postcrash fire.

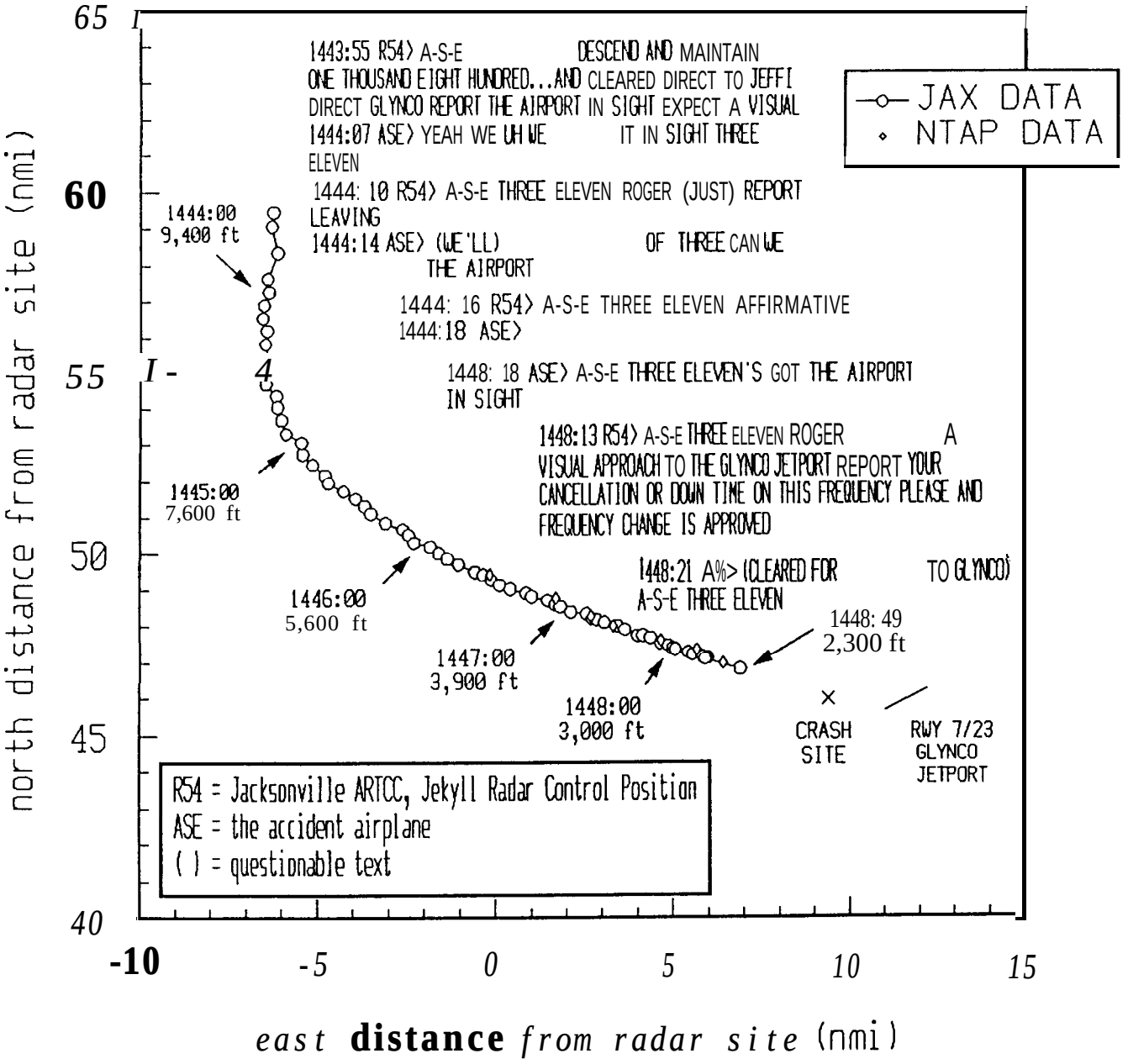

Figure 1.--EMB-120 Accident, Brunswick, Georgia,
Raw Radar Data

1.5 Personnel Information

The captain and first officer were properly certificated in accordance with existing Federal Aviation Regulations (FARs). The investigation revealed that the pilots were in good general health.

The captain, age 34, had been hired by ASA on May 15, 1981. He held an ATP certificate with ratings for the EMB-120, EMB-110, DHC-7, airplane multiengine land and included commercial privileges for airplane single engine land. His first-class airman medical certificate was issued on March 1, 1991, with no limitations. He also held an airframe and power-plant mechanic certificate. The company estimated that at the time of the accident he had accumulated about 11,724 total flying hours, of which 5,720 hours were in the EMB-120.

He received his initial type rating flight check in the EMB-120 on August 18, 1985, and the certificate was issued on August 29, 1985. He had been actively involved in the acceptance of the first EMB-120 placed in service in the United States, and received his training from the manufacturer at the same time as the Federal Aviation Administration (FAA) project pilot, who subsequently gave him his type rating flight check. The inspector commented on the flight check form, "Excellent flight check and oral test, has extensive knowledge of aircraft and systems. Excellent pilot techniques." The captains last proficiency check was accomplished on February 25, 1991, and his last recurrent training was received on October 26, 1990. There was no record of any incidents, accidents, flight violations, or enforcement investigations in his FAA airman records.

The first officer, age 36, was hired by ASA on June 6, 1988. He held an ATP certificate with ratings for airplane multiengine land, and commercial privileges for airplane single engine land. He also held a flight instructor certificate, with ratings for airplane single and multiengine. His most recent FAA first-class medical certificate was issued on July 27, 1990, with no limitations. Because more than 6 months had passed since the first-class medical certificate was issued, it automatically reverted to a second class certificate. A second class certification was adequate for his duties as a first officer.

At the time of the accident, the company estimated that he had accumulated about 3,925 total flying hours, of which 2,795 hours were in the EMB-120. After being hired by ASA, he completed ground school on June 30, 1988, and began flight training in the EMB-120 on July 18, 1988. He completed his initial proficiency check on July 26, 1988, and his most recent proficiency

check was on May 16, 1990. He received his last recurrent training on October 18, 1990. There was no record of any incidents, accidents, flight violations, or enforcement investigations in his FAA airman records.

1.6 Aircraft Information

The airplane was an Embraer EMB-120, Brasilia, S/N 120-218, registration N270AS, manufactured on November 30, 1990. It was equipped with two Pratt & Whitney of Canada PW-118 engines and Hamilton Standard 14RF-9 propellers. The airplane received its U.S. standard airworthiness certificate on December 20, 1990. The airplane had accumulated about 816.5 total hours of flight time and 845 cycles. Its last daily line inspection was completed on April 4, 1991, and its last phase inspection, an "A" check, was completed on April 1, 1991, at 790.9 hours.

During the last phase inspection, an operational check of the flight idle lockout systems for the left and right engines was performed. An inspection of the autofeather and beta system[1] was performed during the line inspection conducted on the morning of the accident. During this line inspection, an operational inspection was accomplished on the flight idle lockout system in accordance with the manufacturer's and the airline's approved procedures. Additionally, the airline's standard practice was to perform a feather/unfeather check of the propellers prior to each flight. Discussions with ASA pilots indicated that the check was routine and always accomplished prior to flight. Additionally, other ASA pilots who had flown with the captain of flight 23 11 reported that he always accomplished this check.

A review of the airplane's maintenance logs disclosed only one deferred maintenance item. It was for fuel leaking from the auxiliary power unit (APU) cowling. The circuit breaker for the APU had been pulled and secured pending resolution of this discrepancy. There were no recurring pilot complaints

---

1 The beta range of operation is intended for ground use only. It is the range of propeller blade angles between flight idle and ground idle. In this range, the propeller blade angle is controlled directly by power lever movement, and the propeller governor has no effect on blade angle. The power lever quadrant has gates at the flight idle position to prevent inadvertent movement of the power lever below the flight idle position. Additionally, the EMB-120 is equipped with a flight idle lockout system. The lockout system is an electrically actuated physical stop in the power lever linkage which prevents power lever movement into the beta range until the airplane is on the ground.

or maintenance discrepancy cards concerning the flight control systems, engines, propellers, or auto-pilot system.

The maximum allowable gross weight for the airplane was 25,529 pounds with a center of gravity limitation of 18.7 percent and 40 percent of mean aerodynamic chord (MAC). Upon departure from Atlanta, the airplane weighed about 23,303 pounds. The landing weight at Brunswick, Georgia, would have been about 22,303 pounds. The center of gravity for the flight was calculated to have been 32 percent MAC. During the departure from Atlanta, while en route, and at the time of the accident, the airplane was within its allowable weight and center of gravity limitations.

1.7 Meteorological Information

At 1450, the reported surface weather observation at Brunswick was:

Clouds--2,500 feet scattered, estimated 10,000 feet broken, ceiling 20,000 feet broken; wind--l60 degrees at 10 knots, visibility--7 miles, temperature--78° F, dewpoint--69° F, and altimeter--30.19 inches of mercury. Moderate rain was reported at Brunswick at 1350. The rain began at 1303 and ended at 1410.

1.8 Aids to Navigation

There were no reported or known difficulties with the navigational aids.

1.9 Communications

There were no reported or known communications difficulties.

1.10 Aerodrome Information

The Glynco Jetport is located 5 miles north of Brunswick, Georgia, at an elevation of 26 feet mean sea level (msl). The airport had one runway, 07-25, which was 8,001 feet long by 150 feet wide. The airport is served by a common traffic advisory frequency (UNICOM). When the accident occurred, the largest airplane used to provide commercial passenger service to the airport was the EMB-120.

Runway 07 had an instrument landing system and a medium intensity approach light system with runway alignment indicator lights (MALSR). The runway was equipped with unlighted distance-to-go markers. The airport was certificated by the FAA as an Index A airport for Aircraft Rescue and Fire Fighting (ARFF) service. The current FAR Part 139 certificate was obtained on March 31, 1982. The airport ARFF station was located adjacent to the terminal building. The airport's approved emergency plan was last exercised in February 1990, with a 12-month review in January 199 1.

1.11 Flight Recorders

N270AS was not equipped, nor was it required to be equipped, with either a cockpit voice recorder (CVR) or a flight data recorder (FDR). Commencing on October 11, 1991, CVRs were required on multiengine turbine-powered airplanes with six or more passenger seats. FDRs were required on commuter airplanes with 20 or more passenger seats. N270AS had been prewired during its manufacture for the installation of a CVR and a FDR.

1.12 Wreckage and Impact Information

The accident site was located on flat terrain in a densely forested area. The total length of the wreckage path was about 250 feet from where the airplane first struck the tops of the trees. The airplane came to rest, upright, on a heading of about 245 degrees. The bearing from the initial tree strikes to the wreckage was approximately 355 degrees. Damage to the trees indicated that the airplane was banked nearly 90 degrees to the left and in a steep angle of descent at impact. All of the airplane's structure was accounted for at the described wreckage site. There was no evidence of any in-flight fire or preimpact separation of airframe components.

The interior of the passenger cabin was destroyed by fire, and most of the fuselage between the cockpit and the aft cargo compartment was burned to the level of the ground. Both wings were in their relative positions to the fuselage but severely burned and distorted. Impact marks on the flap track roller indicated a flap setting between 25 and 45 degrees (the flap roller only rotates about the same point after the extension has reached 25 degrees). The flap handle in the cockpit was set at 25 degrees. Additionally, all of the flap actuator rods indicated similar extensions that correlated with a flap setting of 25 degrees. The elevators, rudder, ailerons, and trim tabs showed no evidence of preimpact failure.

Examination of the three landing gear extension actuator rods showed that all three landing gears were in the extended position. The landing gear control lever in the cockpit was set to the down position. There was no evidence of preimpact failure of any of the control system components.

The cockpit power levers were found above flight idle. The lever for the No. 1 (left) engine was 1.9 inches from the center pedestal forward mounting flange, and the lever for the No. 2 engine was 4.0 inches from the flange. The No. 1 condition lever was 0.5 inch from its maximum stop position, and the No. 2 lever was 1 to 2 inches from its maximum stop position.

The on-scene inspection of the electrical, hydraulic, and fuel systems found no evidence of preimpact failure or malfunction.

The on-scene inspection of both engines and propellers did not reveal any evidence of preimpact malfunction or failure. There was burned and shredded vegetation throughout the gas path on both engines. Maintenance records indicated that the propellers and engines had a total time of 8 16.5 hours and had accumulated 845 cycles since new. The details of the tear-down inspections of the engines and propellers are discussed in section 1.16.2.

1.13 Medical and Pathological Information

The cause of death for the 20 passengers and the three crewmembers was determined to have been blunt force impact trauma. Autopsies of the two pilots did not reveal any preexisting conditions that could have contributed to the accident. The toxicological specimens obtained following the accident were negative for drugs (licit and illicit) and alcohol.

1.14 Fire

There was no evidence of an in-flight fire. The fuselage was largely consumed by the postcrash fire.

1.15 Survival Aspects

The accident was nonsurvivable due to the high impact forces.

1.16 Tests and Research

1.16.1 Airplane Systems

Selected components from the airplane were examined at the Safety Board's laboratory and at the respective manufacturers' facilities. The cockpit Multiple Alarm Panel (MAP), the overhead panel, engine instruments, flap annunciator panel, engine control pedestal, auto-pilot control panels, and the engine flight idle lockout stops from the engine nacelles were examined in detail. A lightbulb analysis was conducted on all 40 lightbulb capsules in the MAP, as well as caution and warning lights for the overhead panel and glare shield. The examination disclosed no warnings of a problem prior to impact. Examination of the lightbulb filaments from the beta warning panel found that the filaments were not elongated, indicating that the filaments were not illuminated at impact. The beta warning light is powered by a switch on the propeller control unit (PCU) and is lighted when the PCU is operating in the beta range. The circuit breaker for the flight idle lockout protection system was found in the "in" or "circuit closed" position.

During the documentation of the cockpit, it was found that the number 1 and 2 inverter switches, the autofeather switch, and the rudder boost switches for the two hydraulic systems were in the "off' position. These switches would normally be in the "on" position during the approach to the airport. Subsequent examination in the laboratory under magnification revealed that the inverter and rudder boost switches had been forced to the "off' position. There was no evidence that the autofeather switch had been forced to the "off' position, and the switch was found to move freely.

The section of the cockpit control pedestal, which contained the engine power and condition levers, was examined in detail in the Safety Boards laboratory. The power and condition lever rods and bellcranks beneath the pedestal were examined for evidence of witness marks on adjacent brackets. No marks were found that would indicate the position of the levers when the airplane struck the trees or the ground.

The engine flight idle lockout stops and brackets from both engines were examined in the laboratory for any witness marks that could be associated with preimpact position of the engine controls. Additionally, the solenoid for each lockout, though damaged by impact, heat, and fire, was examined in detail. These

examinations did not disclose the preimpact position of the engine controls due to the damage that had occurred.

Examination of the rudder power control unit and its two actuators revealed that the units exhibited minimal damage from impact and postcrash fire. The units were examined at the manufacturer's facility and functionally tested. The tests found that the power control units and the actuators met or exceeded the manufacturer's production acceptance test standards. The autopilot servo and associated components were taken to their manufacturer's facility for inspection. The units had been exposed to varying degrees of fire, heat, and impact damage which precluded functional testing. However, disassembly of the units revealed nothing abnormal, and the servo spools were not binding and were free to move.

1.16.2 Engine and Propeller Inspections

The Pratt and Whitney Canada PW-118 is a turbopropeller engine consisting of two modules, the turbomachinery module and the reduction gearbox module, joined to form a single unit. The turbomachinery includes two independent, coaxially mounted, centrifugal compressors, each driven by a single stage turbine, and a two-stage power turbine that drives the reduction gearbox by means of a coaxial shaft that passes through the compressor shaft. The reduction gearbox drives a flanged propeller shaft and also provides accessory drives.

The Hamilton Standard 14RF-9 propeller is a flange mounted, controllable pitch, dual acting, full feathering, reversible, four blade propeller with composite blades. The propeller and PCU are mounted on a common centerline and connected through the propeller shaft by the oil transfer tube. The transfer tube provides high pressure oil from the gearbox-mounted main oil pump to the propeller hub. The PCU governor provides metered oil pressure to operate a ballscrew drive which imparts rotary motion to the transfer tube by means of a splined quill. The transfer tube turns an acme screw in the pitch change assembly. The acme screw positions the pitch change selector valve, which directs oil to the "increase pitch" or "decrease pitch" side of the piston. (See figure 2).

Both PCU oil transfer tubes had the newer titanium-nitrided surface coating on the splines that engage the quill rather than the originally certificated nitrided surface finish. The spline surfaces on both tubes had a "matted" or dull finish appearance. The manufacturer's engineers stated that the matted appearance was the result of a relatively rough surface and that a smoother surface would have

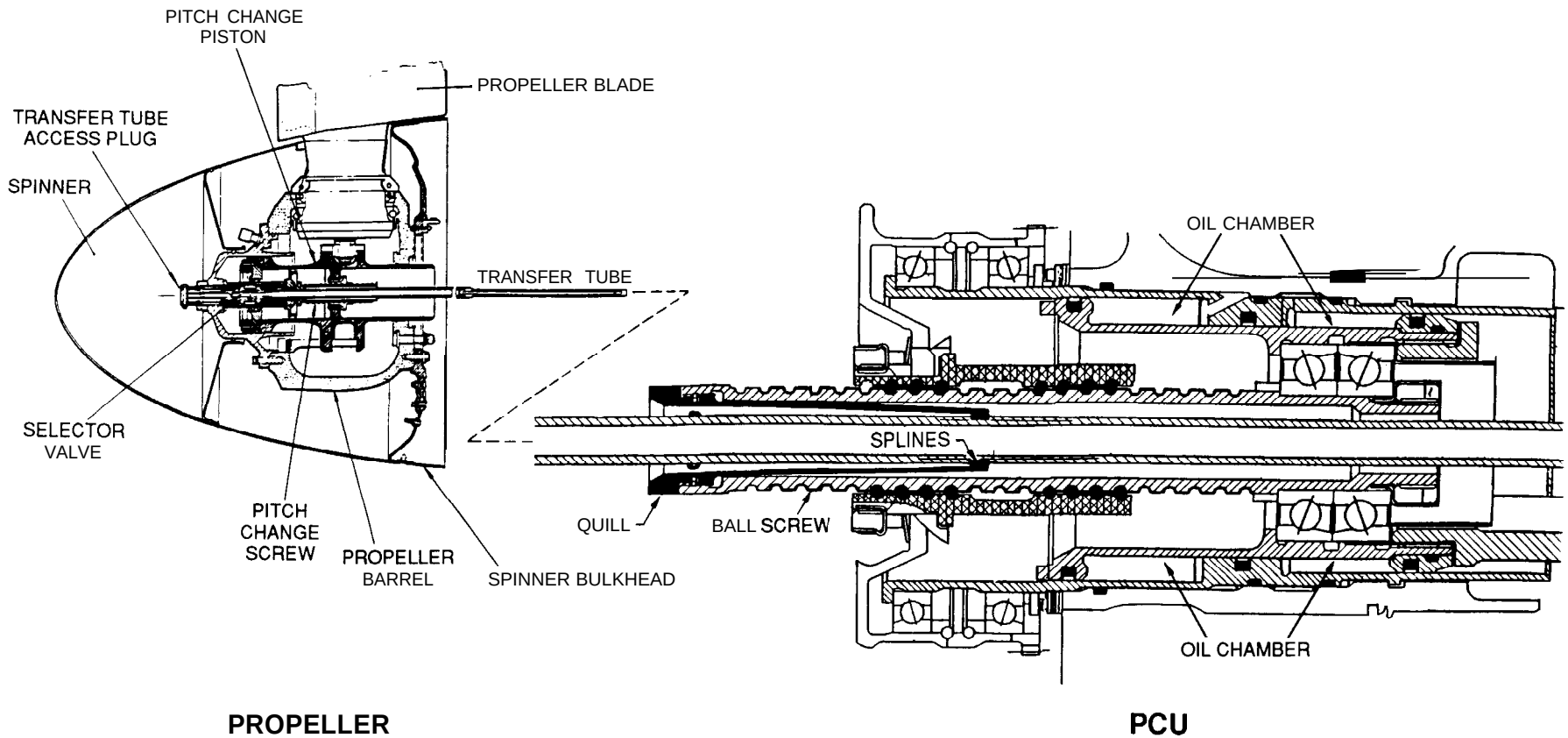

Figure 2.--Hamilton Standard propeller system Model 14RF.

more of a gloss or shiny appearance. They further stated that the matted finish was within the allowable surface finish specifications for the transfer tube splines.

On the left engine, the PCU remained mounted to the reduction gearbox, and the propeller hub was mounted to the propeller shaft. The PCU had separated from the reduction gearbox on the right engine. The oil transfer tube remained attached to the propeller actuator assembly and was bent in the area outside the reduction gearbox at the PCU end. The right propeller hub remained mounted to the propeller shaft flange and had been exposed to extensive fire. All four blades from both propellers had separated from their respective hubs.

The teardown inspections of both the left and right engines revealed no evidence of preimpact damage or of fire or malfunction prior to impact. Additionally, the inspections revealed no evidence of damage that would be associated with either engine having experienced an overspeed condition. Over-speed experience with the PW-118 has indicated that if an engine has been subjected to propeller speeds greater than about 120 percent or maximum authorized speed, rub marks will occur on the power turbine shaft and the interior of the high pressure rotor shaft. At propeller speeds above about 140 percent, the compressor impellers will start rubbing the inner diameter of the engine case.

The propeller blades, propeller hubs, transfer tubes, and PCUs were examined at the manufacturer's facility. The examination and matching of damage and score marks on the propeller blades and hub halves were inconclusive and indicated that the blade angles varied from -36.5 to 68 degrees on the left propeller assembly and 28 degrees to 35 degrees on the right propeller assembly.

The end of the pitchlock screw to the end of the pitchlock screw nut was measured on each propeller to determine the blade angle as correlated with the acme screw position. These measurements disclosed that the blade angle on the right propeller was 22.6 degrees and that the blade angle on the left propeller was 3 degrees.

The PCU ballscrew position was measured on both units. The measurements indicated that the PCU ballscrew position for the left propeller was in a location that would coincide with a PCU-commanded propeller blade angle of 79.2 degrees, which is the feathered position. The PCU ballscrew position for the right propeller corresponded to a commanded propeller blade angle of 24.5 degrees.

The ballscrew quills were removed from the PCUs for examination. The quills from both PCUs had severely worn internal splines. (See figure 3). The spline teeth on the left quill were almost entirely worn away, and the wear pattern was slightly off the axial centerline. The right quill spline wear was more eccentric with a heavy wear pattern on one side and relatively little wear on the opposite teeth. The left quill was assembled on the left oil transfer tube for measuring radial displacement of the quill when engaged on the spline teeth of the transfer tube. While thus assembled, the quill would rotate freely about the tube, and the quill teeth were worn to the extent that they did not engage the grooves or teeth on the tube. A similar test accomplished with the right quill indicated that the quill would engage the spline teeth of the transfer tube.

1.16.3 Propeller System Static Testing

During the inspection of the PCU quills, Hamilton Standard representatives and engineers stated that while the extreme wearing of the quill was unusual, the FAA certification tests and computer simulation modeling of the propeller system indicated that the disengagement of the quill from the transfer tube would not result in an unsafe condition. The representatives stated that such a disengagement would result in the propeller either staying at the blade angle in which the disengagement occurred or eventually assuming the feathered or streamlined position. The manufacturer's representatives stated that because of the "fail-safe" nature of the propeller design, as confirmed by testing and failure modes and effects analysis,[2] and the relatively low torque loads imposed on the mechanism, the transfer tube and quill did not require any periodic inspection or time limits for service.

To determine the effects on propeller control with a severely worn quill, a series of tests was conducted in the engine manufacturer's test cell in July 1991. Three quill configurations were tested: a new standard production quill; a worn quill returned from service; and a modified quill with all of the spline teeth machined away. A transfer tube with the titanium-nitrided splines was used in all of the tests.

---

[2] Failure Modes and Effects Analysis (FMEA) is a study of the statistical probability of failure modes of individual components within an operating system and the consequences of each assumed failure on the system operation. Effects analysis considers the ability of the system to prevent additional damage or the development of an unsafe condition.

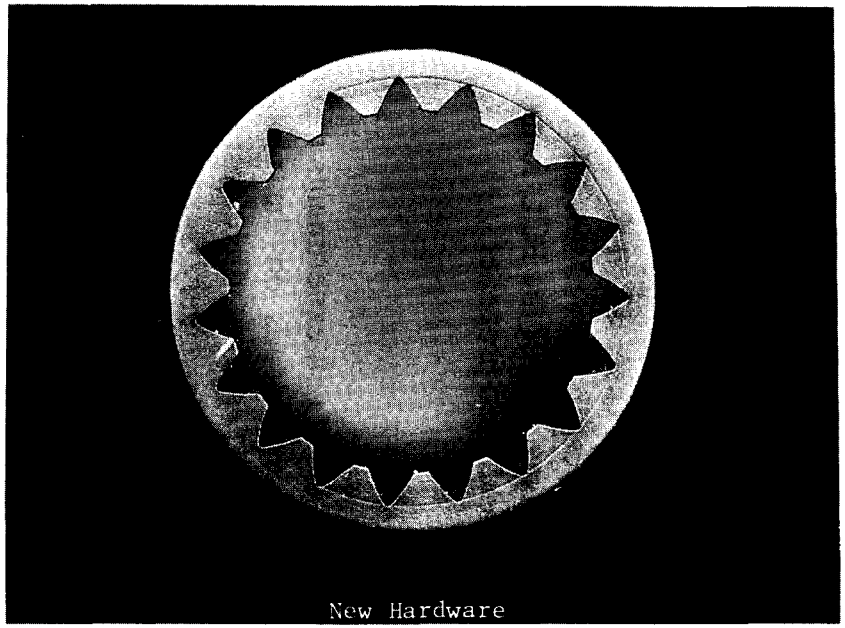

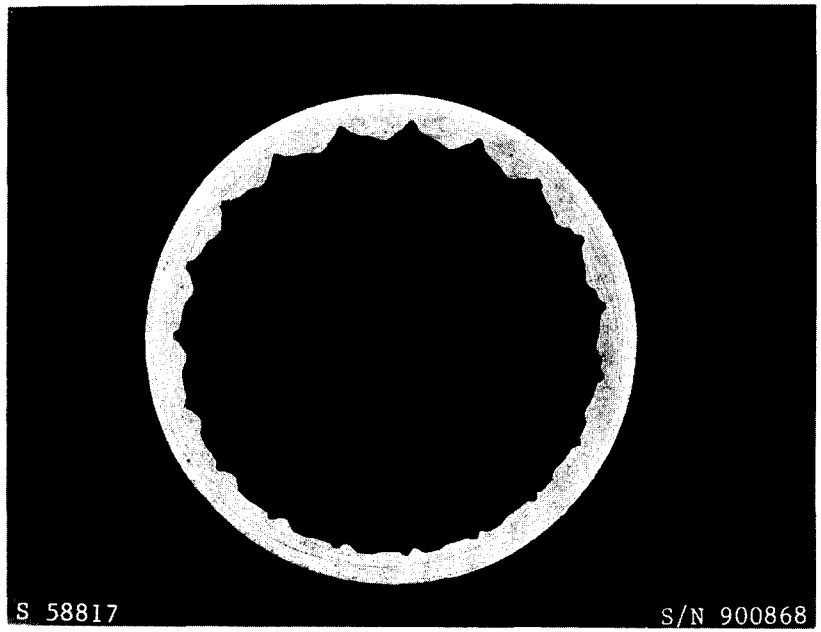

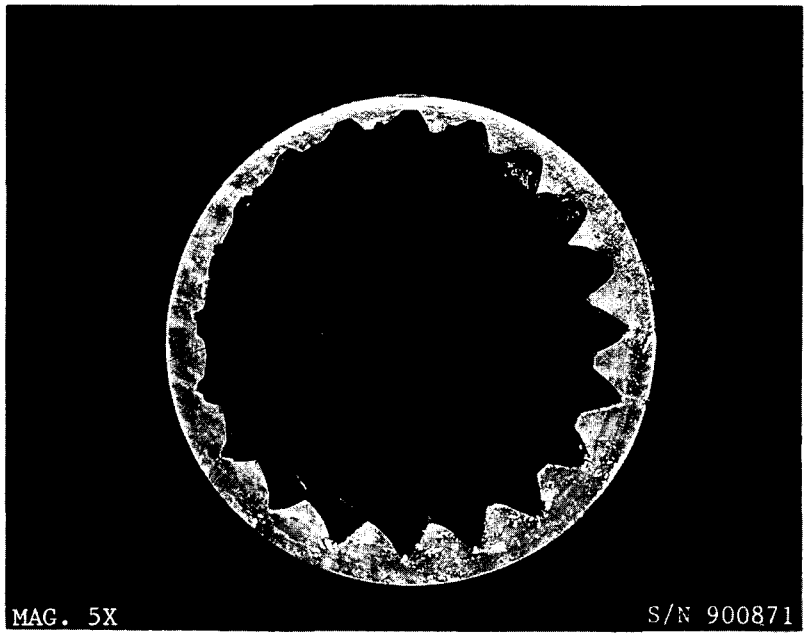

Figure 3.--PCU quill.

The new quill was first installed in the PCU to establish a baseline profile for the standard configuration. After this test, the new quill was replaced with the worn quill. As expected in this configuration, the system was unable to unfeather the propeller after engine start, action that would have precluded further testing. To continue the tests, a pitchlock adapter was installed in the propeller oil system to permit the engine to be started with the propeller at a fixed blade angle position and to provide normal operation of the PCU after engine start. After the engine reached the desired operating speed, the pitchlock adapter was deenergized to allow the PCU to operate in its normal governing mode. With both the worn quill and the machined quill, this method was used to start the engine with the blade angle at a normal in-flight setting of 33 degrees. Two tests were run with both the worn and machined quills. After start, the condition lever was set to select 85 percent propeller speed (N_p), and the propeller operated at 81 percent N_p in the first test and 90 percent N_p in the second test. In each case, when the pitchlock adapter was deenergized, the blade angle slowly and steadily moved toward feather with PCU action having no effect on blade angle. Inspection of the PCU found the quill to be in a position that would correspond to a feathered propeller.

1.16.4 Propeller System Flight Tests

It was recognized prior to the start of the test cell experiments that the dynamic effects of airplane vibration and aerodynamic loads on the propeller assembly could not be duplicated in the test cell. Therefore, flight tests were conducted with a machined quill used to simulate an extremely worn quill in November 1991. The aircraft used for these tests was the prototype EMB-120. The engine, propeller hub, actuator, and PCU used in the static testing were installed in the No.1 (left) engine position. Different propeller blades had to be used because those used in the test cell were considered unairworthy. The actuator was modified to include a fixed low pitch stop at 22-degrees blade angle, which the airplane manufacturer determined would provide for sufficient controllability of the airplane in the event that the propeller blades went into low pitch rather than feather. The pitchlock adapter and the titanium-nitrided transfer tube used for the static testing were also used for the flight tests.

The original test plan called for three quills to be used: a standard production configuration; a modified quill with all of the spline teeth machined away; and the worn quill used in static testing. The standard quill was used to verify that the airplane could be flown using the pitchlock adapter to maintain a selected fixed propeller blade angle and to establish initial test conditions. A procedure was devised to approach pitchlock adapter activation from higher blade

angles to achieve the target test blade angle of 38 degrees. Airplane climb capability, controllability and engine controllability were thus demonstrated at the target fixed blade angle.

Tests were then conducted with the modified quill installed in the PCU. During ground tests, when the pitchlock adapter was activated the propeller blade angles would drift toward lower values. When the pitchlock adapter was deactivated the propeller blade angles would drift toward higher values. In high speed ground runs, it was possible to set the blade angle to 46 degrees prior to engine start, then activate the pitchlock adapter, and start the takeoff ground roll. At approximately 60 knots indicated airspeed (KIAS), the pitchlock adapter was deactivated, and the blade angle increased to about 68 degrees. When the pitchlock adapter was activated, the propeller blade angle remained at 68 degrees. Based upon this experience, the test pilots decided that the airplane could be flown and that the test condition of 42 degrees of blade angle could be set by alternately activating and deactivating the pitchlock adapter.

Using the above procedure, the airplane was flown to the test condition of 125 KIAS at 4,000 feet msl. The pitchlock adapter was then deactivated at a propeller blade angle of 37 degrees, and the blade angle slowly decreased to 27 degrees over 4 minutes. When propeller speed reached 100 percent, the power lever was reduced to maintain that propeller speed. The blade angle then decreased at a higher rate until reaching the 22-degree stop.

A second flight was conducted using the modified quill but at an initial test configuration of 150 KIAS at 5,000 feet msl. The pitchlock adapter was deactivated during the takeoff roll at a propeller blade angle of 46 degrees, and the blade angle slowly decreased during climb to 33 degrees at 5,000 feet. Power was then reduced to maintain 85 percent propeller speed at 35 percent torque. The blade angle slowly increased to 39 degrees. With no further engine control changes, the blade angle then decreased at an average rate of approximately 5.5 degrees per minute to the 22-degree pitch stop. It was noted that the propeller blade angle decreased in steps and that while it was moving the average blade rate was about 7.5 degrees per minute. The test was then terminated, and the airplane returned to base. An overspeed of the propeller did not occur in either of the two tests.

The flight test pilots stated that the aircraft became difficult to control as the propeller reached the 22-degree stops. Therefore, in the interest of safety, no further flight tests were conducted. The pilots also stated that they did not notice

any discernible control problems with the airplane until the propeller blade angle was reduced from 26 to 24 degrees. Further, they said that the first indication of anything unusual was the tendency for propeller speed to rise above 100 percent. They stated that they were able to prevent overspeeding of the propeller by reducing the power lever angle (PLA). At no time during the flight test did the propeller exceed the overspeed governor setting of about 110 percent.

Although only two relatively short tests were conducted, the rate at which propeller blade angles decreased to lower blade angles appeared to be sensitive to several factors, such as airplane attitude, airspeed, and power settings. Because of the potential for loss of airplane control, it was not determined what the rate of propeller pitch change would have been if the propeller blade angles had been allowed to go below 22 degrees.

1.16.5 Flight Simulator Tests

Since many of the possible conditions that could lead to the accident were potentially too hazardous to duplicate in flight, the Safety Board requested that the manufacturer of the airplane make its engineering flight simulator available for a series of tests. In support of these tests, the manufacturer of the propeller assembly provided its most recent simulator model of the propeller system. Additionally, computer software changes were made to simulate reverse propeller thrust with the accompanying loss of lift over the section of wing directly behind the propeller.

The majority of witnesses stated that the airplane was in a steep left bank as it abruptly descended to the ground. Evidence at the crash site indicated a high rate of descent, a northerly heading, and almost 90 degrees of left bank attitude when the airplane struck the trees. The Safety Board evaluated various malfunctions to determine whether they were consistent with the evidence. Seven different failure scenarios were investigated: full upward deflection of the left aileron; flap asymmetry; full left deflection of the rudder; a linear decrease in the left propeller blade angles; a PCU-driven decrease in the propeller blade angles; oscillating propeller blade angles; and the movement of the power lever from flight idle to ground idle in flight. In each case, it was assumed that the malfunction could not be deactivated. Multiple simulator flights were performed for each failure mode.

The starting point for the majority of simulator flights was the point of last radar contact with the accident flight: 2,300 feet above msl, 2.6 nautical miles (nmi) from the crash site, and 4.1 nmi from runway 07. The initial configurations assumed applicable to the accident flight were: landing gear extended, flaps 25 degrees, condition levers to 100 percent N_p, power levers to 30 percent torque, and airspeed between 125 and 150 KIAS. The initial descent rate was approximately 1,000 feet per minute, on a heading of 117 degrees.

Prior to the simulated malfunction tests, simulations of a normal approach to the airport were accomplished to establish a basis for comparison. These simulated flights approximated the radar-defined flightpath of the accident flight to the point where radar data ceased. The accident flightcrew's intended approach path after radar coverage ended is unknown; however, an angling straight-in approach was assumed.

The simulated baseline flights originated at points as far away as 17 nmi from the runway at 7,600 feet msl, and showed that flight 231 l's radar-defined flightpath was reasonable to the extent that a straight-in approach and normal landing could be made from any point along the path while using standard EMB-120 flight manual procedures. The manufacturer's engineering test pilot and the other pilots participating in the test experienced no difficulty with the approach, and in every case the landing was successful.

During certification testing, the EMB-120 was flown with asymmetric flaps, runaway aileron, and runaway rudder conditions. However, quantitative flight test data suitable for use in the simulation model were not recorded. Therefore, during the investigation, wind tunnel data were used to simulate flap asymmetries, aileron hardovers, and rudder hardovers.[3]

During the left aileron hardover test, the maximum autopilot servo torque was used to produce a left roll. During EMB-120 certification testing, it was shown that one pilot could overcome this type of malfunction and control the airplane. In the simulated flight tests, the pilots were able to control the airplane and successfully land.

---

[3] The terms "hardover" or "runaway," when applied to a flight control surface, mean that the surface is driven to an uncommanded position through some type of malfunction. The flight control surface might be driven to either partial or full deflection, depending on the nature of the malfunction.

Two different flap asymmetry conditions were evaluated: the left outboard flap panel was in the 0 degree position and all other panels were at 45 degrees; and the right outboard flap panel was set to 45 degrees and all other panels were at 0 degrees. There was little difference between the two conditions in terms of the magnitude of the rolling moment that had to be counteracted by the pilot to control the airplane. During EMB-120 certification testing, it was shown that one pilot could overcome either type of malfunction and control the airplane. In the simulated flights, the pilots counteracted the malfunction and successfully landed the airplane.

The left rudder hardover was simulated by assuming that the maximum available hydraulic actuator force was applied, producing a left rudder deflection of 9.5 degrees. One flight simulation was accomplished, and the pilot counteracted the rudder deflection and landed. During EMB-120 certification, it was shown that one pilot could overcome an autopilot-induced rudder hardover that produced approximately 5 degrees of rudder deflection.

The remaining four simulator tests addressed EMB-120 controllability with abnormally low propeller blade angles on the left engine. The propeller blade angle for an engine at flight idle power is between 17 and 25 degrees, depending upon airspeed. At blade angles below the flight idle angle of 17 degrees, the propeller can begin to produce considerable aerodynamic drag. Aerodynamic principles dictate that as propeller thrust increases, there is a corresponding rise in the dynamic pressure of the airflow behind the propeller disk. Similarly, as propeller thrust decreases, there is a corresponding reduction in the dynamic pressure of the airflow behind the propeller disk. These changes in pressure occur over a substantial portion of the EMB-120 wing because of the relatively large diameter of the propeller.

The high dynamic pressure of the airflow behind a normally operating engine/propeller produces a sizable lift “gain” on the affected wing. When the propeller is generating reverse thrust, there is a reduction in airflow behind the propeller disk that produces a sizable lift “loss” on the affected wing. These changes in lift contribute to the total rolling moment that must be offset by the flight controls to maintain wings-level flight. Empirical data for the effects of in-flight reverse thrust do not exist for the EMB-120 and therefore theoretical aerodynamic calculations were used to simulate the effect of reverse thrust on wing lift.

The most critical situation occurs while one propeller is producing forward thrust and the other is producing substantially less or reverse thrust. The lift "loss" and lift "gain" on each wing unite to roll the airplane toward the reversing propeller. The simulation model showed that roll control became increasingly difficult as thrust and blade angle decreased on the left propeller. The left rolling moment was most pronounced at high power levels on both engines and was the most significant factor affecting airplane controllability during the simulations. The yawing moment produced by the asymmetrical thrust was a less critical factor.

In the first series of tests, the investigators simulated bypassing the PCU by programming into the simulator different decreasing propeller blade angle rates of change on the left propeller. Normal propeller blade angle was the initial condition for each flight. Blade angle rates of change ranged from 3 to 15 degrees per second. In each of the simulations, the airplane crashed short of the runway. Beginning with the same approach heading as the accident flight, the simulator attitude at crash impact was usually left wing down, along a northwesterly to northerly heading.

The propeller blade angle rates of change that occurred during the flight tests conducted with the prototype EMB-120 indicated that a slow rate of change might be pertinent to the investigation of airplane controllability. Therefore, a series of simulator tests was conducted using the relatively low propeller blade angle rate of change of 7.5 degrees/minute that was exhibited in flight testing. Engine and propeller controls were not moved during the early stages of each test so that torque and propeller speed (N_p) could be monitored. Changes in N_p occurred 20 to 30 seconds after the introduction of the malfunction even though PLA remained constant.

The lower blade angle rate of change allowed the pilot to control the simulator for a longer period of time after the introduction of abnormal blade movement. In two tests, the simulator was controllable for approximately 5 minutes after the introduction of abnormal blade movement. However, a crash still occurred after propeller blade angle on the left propeller neared zero degrees. It was found that as the blade angle on the left propeller approached zero degrees, a reduction to idle power on both engines was necessary for the pilot to acquire a wings-level attitude. Although roll control could be maintained while the power was at idle, the simulated airplane could not fly to the runway and a wings-level crash occurred.

One simulator test used the 7.5 degrees/minute rate of blade angle movement but with the malfunction initiated about 5 nmi away from the runway and only 2 minutes of flying time needed to land. This brief period did not provide enough time for the blade angle on the left propeller to reach the target level of zero degrees. Although roll control became progressively more difficult, the left propeller blade angle remained sufficiently high (12 degrees at the end of the simulation) to allow the pilot to maintain control and successfully land.

In one group of tests, the simulator was configured to allow a PLA-commanded pitch change to preselected blade angles. There were three simulated flights. Two of them used a target blade angle of 3 degrees, and one of them used a target blade angle of 15 degrees. The target angles were reached in each flight with a blade angle rate of change of more than 20 degrees/second. In each case, the airplane crashed short of the runway.

Four simulations were accomplished to evaluate airplane controllability following the use of ground idle thrust in flight. These conditions required the PLA to be below flight idle. In three of the tests, the left PLA was moved from flight idle to ground idle and left in that position. In all three tests the airplane crashed short of the runway. The headings at impact were northerly to northeasterly.

In one simulation, both PLAs were placed into the ground idle range and then back to normal after about 5 seconds. It was noted that the right PLA was not calibrated with the left PLA, apparently because of the differences between the right and left propeller models. Controllability was returned after PLA was returned to flight idle, and a successful landing was made.

The last test evaluated a cyclic propeller blade angle. The minimum blade angle was 3 degrees and changed with time according to a cosine function to simulate an oscillating propeller. The period of oscillation was assumed to be 5 seconds. The airplane crashed short of the runway in this test.

1.17 Other Information

1.17.1 Hamilton Standard Alert Service Bulletin

In January 1991, a PCU for the model 14RF-9 propeller was returned for service to Hamilton Standard for repair. During the service inspection, it was

found that the splines on the quill were extremely worn. The quill had about 3,931 hours in service. In the following 4 months, three other worn PCU quills were discovered by Hamilton Standard's overhaul personnel. On February 14, 1991, a worn quill with 1,975 hours in service was found during overhaul of a PCU; one on April 8, 1991, with 820 hours in service; and one on May 3, 1991, with 726 hours in service. All of the PCUs that contained these quills were sent in for service after the operators found that the propeller would not feather or unfeather during a ground test. The manufacturer's engineers stated that these PCUs were originally equipped with a transfer tube that had the titanium-nitrided splines rather than the nitrided finished splines.

In several years of service, with some PCUs accumulating several thousand hours in service, the manufacturer stated that quill spline tooth wear had not been a problem. Thus, it was determined that the accelerated wear was a result of the introduction of a transfer tube having titanium nitride-coated spline teeth. The titanium nitride-coated surface is significantly harder than the case-hardened nitrided surface of the quill spline teeth. The history of the introduction of the titanium nitride-coated transfer tubes is further discussed in 1.17.2.

Hamilton Standard representatives reported that initially they were not concerned about the finding of the worn quills because of the "fail-safe" design features of the propeller system. They believed that a disconnect of the transfer tube from the quill could only occur when a relatively high torque load was placed on the quill and that such a torque only happens when ground idle is selected, during a feather/unfeather check, or a rapid increase in PLA. It was reported that the torque load during a feather/unfeather check was about 7 times greater than the loads during normal flight.

However, based upon the number of worn quills found, including those from the accident airplane, the manufacturer issued Alert Service Bulletin 14RF-9-61-A49 on May 7, 1991, that advised all operators to inspect PCUs for worn quills and began a fleet campaign to remove from service the titanium nitrided transfer tubes and to replace them with the original nitrided tubes. The Alert Service Bulletin defined the manufacturer's recommended inspection intervals and wear limits for the quill.

On May 9, 1991, the FAA issued emergency airworthiness directive (AD) T91-10-5 1, based upon the service bulletin, which required inspection of the PCU ballscrew quill in installations that had a titanium-nitride transfer tube at a maximum of 500 hours of service and established repetitive inspection intervals.

Instructions were included that provided operators with procedures and wear limits for inspecting the quills.

Reports following the initial inspections indicated that there was a need to reduce the allowable wear limits on the quills and the periodic inspection intervals. In one case, it was reported that a quill that passed inspection did not engage the transfer tube when it was reinstalled in the PCU. Based upon this information, the FAA issued emergency AD T9 l-l l-5 1 on May 19, 1991 which superseded the previous AD. AD T91-1 l-5 1 reduced the initial time-in-service inspection to a maximum of 200 hours and reduced the wear limits and repetitive inspection hours for quills that were returned to service. The terminating action for both ADs was the installation of the original nitrided transfer tube. Hamilton Standard reported that all of the titanium-nitrided transfer tubes had been removed from service by August 1991.

1.17.2 Transfer Tube Finish Change

The FAA certification office responsible for the propeller system reported that there had never been a reported problem with the spline tube-quill gear connection when it was equipped with the nitrided spline tubes. The nitrided surface was originally specified for the propeller system and had been manufactured until June 1990. A review of the FAA service difficulty reports and the malfunction or defect reports did not reveal any service problems with the original nitrided spline tubes.

The FAA and the manufacturer reported that the surface finish on the transfer tube spline was changed in order to improve the ability to manufacture the transfer tube. It was further stated that the transfer tube had been a candidate in the manufacturer's product improvement program. The change in surface finish was made to eliminate the finish scaling and the straightening problems encountered when nitriding the spline teeth by the hot bath method. The titanium-nitride surface is applied by a vapor deposit process at much lower temperatures. The manufacturer's various technical review committees, following the procedures of the FAA-approved Quality Program Manual and Engineering Systems Manual, concurred with the change to the titanium-nitrided coating. The manufacturer's past experience had indicated that the wear rate for the titanium-nitrided coating was three to four times less than the original nitrided finish. However, wear was not considered a factor because the design load of the spline to quill is relatively small, about 7 inch-pounds. Additionally, the manufacturer reportedly had

considerable experience in using titanium-nitrided coatings on other similar applications and engaging materials with different surface finishes without any problems.

The surface roughness specification for the transfer tube spline teeth was the same for both finishes, and the manufacturer reported that production splines always met the design requirements. On May 31, 1991, the manufacturer reverted back to the use of the original nitriding process for the transfer tube spline surface and began a program to remove the titanium nitrided tubes from service. At that time, the surface finish specification, both prior to and after nitriding, was significantly changed in order to ensure a smoother surface on the transfer tube splines.

Prior to applying for approval of the titanium-nitrided transfer tube for service, Hamilton Standard conducted a series of test cell runs from June 18 to August 1, 1987, using a General Electric turbine engine. During these tests, a total of 229.18 engine hours was accumulated, exceeding the 150 hours normally required for a propulsion system certification test. During the tests, the propeller was feathered twice every 55 minutes, resulting in an accumulation of 500 feather cycles. Additionally, the test cycle provided for 750 propeller reverse cycles and 750 cycles from ground idle to takeoff and back to ground idle. The spline surface of the titanium-nitrided transfer tube used had a “bright gold” or “shiny” finish. Both the transfer tube and the ballscrew quill were examined after the tests and found in good condition with no visible signs of wear. Tests were not accomplished with a “matted gold” or dull finished titanium-nitrided transfer tube.

At the completion of these tests, further review of the proposed design change was accomplished by Hamilton Standard’s Configuration Manager, a Production Control Representative, a Manufacturing Engineer, a Quality Control Engineer, a Reliability Engineer, a Project Engineer, and a FAA-Designated Engineering Representative (DER). Upon their approval of the proposed change in finish coating materials, another DER completed the FAA Statement of Compliance form, indicating his approval of the proposed change.

The type-design change provisions of 14 CFR section 21, subpart D were used by Hamilton Standard to approve the titanium-nitrided coating for the transfer tube spline. The coating change was classified as a minor change to the type design under FAR section 21.93. Since the FAA authorizes, under FAR section 21.95, a type certificate holder to introduce a minor change without prior FAA approval, Hamilton Standard approved the coating change after completing

the above-mentioned tests and analysis. The statement of compliance form was submitted to the FAA certification office as part of Hamilton Standards periodic data submittal. The design change paperwork was reviewed by FAA certification engineers and subsequently approved on January 6, 1988. However, the first titanium-nitrided transfer tubes did not enter service until July 1990.

The failure mode and effects analysis of all the propeller components was completed by the manufacturer, and a report was submitted to the FAA during the original certification of the propeller system. The components were grouped into two failure categories. The first group included failures that had a predicted probability of occurrence of less than 10-9, and the second group included failures with a predicted probability of greater than 10^{-9}. The transfer tube and quill interface were listed in the first group and were assigned as an "on condition" inspection item because of the perceived extremely remote possibility of failure and the lightly loaded application. For an "on condition" component, inspection is only required after a problem is found during service. Since the transfer tube and quill were considered structural parts having a remote possibility of failing, verification of the propeller system response following the failure of these components was not required.

The transfer tube was also an item that had been inspected under the FAA Maintenance Review Board's analytical sampling program of propeller components. As previously stated, there had been no reported discrepancies or wear of the spline tube during these inspections. Therefore, the FAA determined that there was no need to change the "on condition" inspection criteria for the transfer tube.

The certification standards for reversible propellers are contained in 14 CFR section 35.21. These standards state, in part, the following:

> A reversible propeller must be adaptable for use with a reversing system in an airplane so that no single failure or malfunction in that system during normal or emergency operation will result in unwanted travel of the propeller blades to a position substantially below the normal flight low-pitch stop. Failure of structural elements need not be considered if the occurrence of such a failure is expected to be extremely remote.[4]

---

[4] The FAA has defined "extremely remote" as a possibility of failure of less than 10^{-9}.

The FAA reported that during the certification of a propeller system, the FAA establishes a certification basis or criteria for the propeller system. The manufacturer must then demonstrate compliance with the certification basis by a combination of testing, computer modeling, and analysis. The average percentage distribution of these activities for propellers is: 72 percent for testing, 2 percent for computer modeling, and 26 percent for analysis. After satisfactorily demonstrating compliance of the propeller with the certification basis, the FAA issues a Type Certificate. Flight test evaluation of an airplane powered by the propeller is accomplished during the FAA's certification of the airplane.

1.17.3 Propeller Control Unit Servo Ballscrew Wear

During the investigation, the Safety Board became aware of incidents involving another problem with the Hamilton Standard PCU used on the EMB-120. On three occasions involving different airplanes, the operators found that a propeller would not feather during ground tests. The PCUs were sent to the manufacturer's facility for overhaul. Unlike the worn quill problem, the inspection of the PCU components found that the ballscrew teeth that engage the quill were extremely worn and would 'not engage the gear teeth on the quill. The manufacturer first noted this problem on September 7, 1990, while inspecting a PCU that had about 3,600 hours in service when returned. The next occurrences of this problem were on March 5, 1991, on a PCU with about 5,400 hours in service and on May 18, 1991, on a PCU with about 2,600 hours in service. As in the case of the worn quills, the manufacturer believed that the disengagement would only occur during the relatively high torque loads during a feather/unfeather check and that servo ballscrew wear was not a safety of flight issue.

On February 28, 1992, an Air Littoral EMB-120 experienced a loss of propeller control after takeoff from Rome, Italy. It was reported that prior to starting the engines, the pilot noticed that the propeller was not fully feathered. After starting the engines, he accomplished several feather/unfeather checks and believed that the propeller operated satisfactorily. After takeoff, the pilot noticed that the engine was overtorquing to about 110 percent and that propeller speed was dropping. He reduced PLA to flight idle and returned to the airport. During the final approach to landing, he shut down the engine and the propeller did feather. The subsequent landing and roll out were uneventful. The inspection of the PCU revealed extreme wear on the outer diameter splines of the servo ballscrew to the extent that the servo ballscrew would not fully engage the quill. The investigation of this incident is being conducted by the French Bureau Enquetes-Accidents.

Based upon findings of the Air Littoral incident, Hamilton Standard issued a service bulletin on March 9, 1992, that provided for periodic inspections for wear of the internal splines on the propeller model 14RF-9. Only propeller model 14RF-9 was addressed by the service bulletin as the extreme spline wear has only been documented in EMB-120 airplanes equipped with this propeller. On April 10, 1992, the FAA issued airworthiness directive 92-08-03 that required compliance with the Hamilton Standard Service Bulletin.

1.17.4 Flightcrew Scheduling

The flightcrew spent the night before the accident on a layover in a hotel following a 9-hour and 21-minute duty day that included 5 hours and 40 minutes of flight time. They were off duty for about 8 hours. This scheduled "'reduced rest" period provided the crew with about 6 to 6.5 hours of rest from the time they checked into their hotel until they received their wakeup calls. When the flightcrew was observed eating a meal on the morning of the accident prior to reporting for duty, they appeared alert and normal in all respects.

The rest time of ASA flightcrews, including the pilots of flight 2311, complied with the reduced rest provisions of 14 CFR Part 135. The FAA, upon publishing the flight time limitations and rest requirements for Part 135 scheduled operations in 1985, referred to the use of the reduced rest provisions of the regulation and stated:

> The purpose of the rest reduction is to allow scheduling flexibility for the benefit of air carriers, pilots, and the flying public. Although this rule allows for scheduling a reduced rest, it does not allow for any reduction of the minimum reduced rest or the minimum compensatory rest under any circumstances. Therefore, in order to benefit fully from this flexibility, an air carrier should schedule realistically to avoid any possible flight schedule disruptions. The FAA expects that most air carriers will schedule at least 9- to 1 l-hour required rest periods. But in those instances when air carriers need to schedule a shorter rest or when rest must be reduced because actual flight time has exceeded scheduled flight time, the rule allows for some scheduling flexibility.

The FAA further stated that:

> The FAA wants to stress that the goal of these revisions is to prevent fatigue. . ..It is the responsibility of both the operator and the flight crewmember to prevent fatigue, not only by following the regulations but also by acting intelligently and conscientiously while serving the traveling public. This means taking into consideration weather conditions, air traffic, health of each flight crewmember, or any other circumstances (personal problems, etc.) that might affect the flight crewmember's alertness or judgment on a particular flight.

During the rulemaking process, airline and regional airline association representatives assured the FAA that the reduced rest provisions of the proposed regulation, necessary to provide an air carrier with the flexibility to cope with operational delays, would be applied by air carriers on a contingency basis, and would not be used to routinely develop daily schedules.

The reduced rest provisions of the regulation allow an air carrier to shorten the rest period of a flightcrew to accommodate operational delays when they are encountered. However, a review of the duty and rest time of the accident flightcrew and other ASA pilots indicated that reduced rest periods were scheduled for about 60 percent of the layovers in day-to-day operations. A review of other regional airlines indicated a similar tendency to schedule duty cycles that would require reduced rest schedules.

The FAA has recently commissioned a working group to study the flightcrew duty time for operations conducted under 14 CFR Part 135. The working group is expected to convene officially after May 1992, and will be part of the Aviation Rulemaking Advisory Committee.

2. ANALYSIS

2.1 General

The investigation revealed that the flightcrew was properly certificated and qualified in accordance with applicable Federal Aviation Regulations (FARs) and company requirements and that they were in good general health and had proper FAA medical certificates at the time of the accident. There was no evidence of adverse medical conditions that affected the flightcrew, and they were not under the influence of, or impaired by, drugs or alcohol. Additionally, there was no evidence that the performance of either flight crewmember was impaired by fatigue.

The investigation determined that the airplane had been maintained in accordance with applicable FARs and company operations' specifications. Weather was not a factor in the accident.

Simulation tests of asymmetric flaps, runaway aileron, and runaway rudder malfunctions found that in every case, and with different pilots at the controls, it was possible to control the airplane and to successfully land the airplane. These simulation tests were consistent with the certification findings that such malfunctions would not cause uncontrollable flight characteristics. Also, extensive investigation disclosed no evidence of problems with any flight control system. The subsequent inspection of the control system actuators did not find any evidence of a malfunction or asymmetric condition. Therefore, the Safety Board does not believe that a flight control system malfunction either caused or contributed to the accident.

Examinations of the engines revealed that all damage was the result of impact and ground fire. No evidence of malfunction or failure prior to ground impact was found. The rotational-type damage in the compressor impellers and turbines of both engines indicates that both engines were operating normally at impact. The presence of burned and shredded vegetation throughout the gas path is also indicative of normal air flow and combustion in the engines at the time of impact with the trees.

The circumstances of this accident indicate that a severe asymmetric thrust condition caused a left roll that led to loss of control of the airplane. The Safety Boards investigation examined all the possible events that could have

caused the loss of control. The powerplant and propeller examinations indicated that the engines were operating normally but that a propeller system malfunction occurred which caused abnormally low propeller blade angles and a high drag condition on the left side of the airplane.

2.2 Propeller System Components

On the right engine, the pitchlock acme screw was in a position that corresponded to a propeller blade angle of 22.6 degrees, and the ballscrew was in a position of 24.5 degrees. This difference of 1.9 degrees is within the expected accuracy of the measurements. Therefore, the evidence indicates that the PCU on the right engine was properly controlling the right propeller blade angle prior to impact.

Examinations of the left propeller components indicated a propeller blade angle of about 3 degrees at impact. This position was based upon the position of the pitchlock acme screw. The left PCU ballscrew position indicated that the PCU had commanded a blade angle of 79.2 degrees. The discrepancy between the ballscrew position and the position of the pitchlock acme screw is a strong indication that a disconnect between these two components occurred prior to impact and that the left propeller had achieved an uncommanded blade angle below the normai flight range.

The position of the PCU ballscrew on each engine is significant. When an propeller off-speed condition is sensed by the governor, oil pressure is directed to one side or the other of the ballscrew to move the servo valve by means of the transfer tube, thereby commanding an appropriate blade angle change.

If the speed change does not occur, the ballscrew will continue to move until it reaches its limit of travel. Because the left PCU ballscrew was found in a position corresponding to feather blade angle, and the left propeller actuator was at a low blade angle position, it is apparent that a condition existed in which the PCU was moving in a direction to slow propeller speed by increasing blade angle; however, the actuator did not respond. Because there was no preimpact damage to preclude normal servo valve and actuator operation, the most likely reason for the failure to change blade angle was the failure of the PCU to position the servo valve because of the worn quill spline, which was disengaged from the transfer tube spline teeth.

The cause of the wear on the quill spline teeth is attributed to the difference in surface hardness between the titanium-nitrided coating on the tube splines and the conventionally nitrided quill splines. The titanium-nitrided surface is much harder than the original nitrided surface. Because it is a thin coating applied over the base material, it conformed to, but did not fill in, any surface irregularities. It was found that the surface roughness specification for the original nitrided finish was the same as that used for the titanium-nitrided finish. Therefore, the relatively hard and rough titanium-nitrided surface sliding on a less hard surface would act like a file and cause abnormal wear of the gear teeth in the quill.

Using measurements and the inspection procedures for the quill and transfer tube of the Hamilton Standard Alert Service Bulletin, it was determined that the left PCU quill spline was worn to the extent that its gear teeth did not engage the transfer tube spline. In addition, the test cell and flight tests showed that the propeller blade angle could not be controlled by the PCU with a disengaged transfer tube. In the test cell, the blade angle moved toward high pitch; however, the propeller was operating at zero airspeed and did not experience normal flight loads. In contrast, the flight tests showed that the blade angle would move toward low pitch with a disengaged transfer tube. The blade characteristics indicate that centrifugal and aerodynamic twisting moments tend to move the blades toward low pitch.

The Safety Board believes that the worn quill on the left engine PCU became disengaged from the transfer tube prior to the loss of control of the airplane during the approach to Brunswick. Moreover, the propeller blades moved to a low angle, resulting in an asymmetric lift and drag condition that exceeded the capability of the pilots to counteract with the airplane controls available.

In the flight test, with a quill with no teeth, the propeller blade angle decreased at a slow rate--a situation that the pilot might be expected to notice and attempt to correct. However, without quill engagement, the pilot would have no control of propeller blade angle and would have had limited control of engine speed by reducing torque or shutting the engine down. Because of the 22-degree fixed stop used for the flight test, it is not known whether the pitch change rate would increase as the propeller blades moved below that angle. The blade angle would probably continue to decrease due to a centrifugal twisting moment resulting from the distribution of mass along the propeller blade chord line. With the disengaged spline, the propeller could not be feathered; thus, a high asymmetric

drag condition would have existed along with a substantial loss of lift on the wing section aft of the propeller disk.

The damage to the engine and propeller indicates that the engine was developing power at impact. Therefore, the Safety Board believes that the crew did not shut down the engine and that after the propeller blade angle decreased to the range below flight idle, the airplane was no longer controllable. The Safety Board believes that the flightcrew would have taken actions to regain control of the left propeller; however, the actions that were taken and the effects of those action are unknown.

2.3 Loss of Propeller Control

It was the airline's procedure to conduct a feather/unfeather check of the propellers prior to each flight. Discussions with pilots for the airline indicated that the procedure was routine and always accomplished by the captain of flight 2311. Therefore, the Safety Board believes that in all likelihood the flightcrew of flight 2311 accomplished the feather/unfeather check prior to departing Atlanta and that no problems were noted during the check.

Hamilton Standard engineers said that in accomplishing the feather/unfeather check, the highest torque loads are transmitted to the ballscrew quill. They said that although the torque load is relatively low in actual magnitude, the normal torque experienced during flight is about 7 times lower. Previous disconnects of the transfer tube from the ballscrew quill have been detected during the feather/unfeather check. On those occasions, after accomplishing the feather/unfeather check, the flightcrews discovered that the propeller would no longer respond to power lever commands.

The Safety Board believes that there was sufficient engagement between the quill and the transfer tube during the feather/unfeather check before the accident flight to permit a successful check. However, during the flight, the quill continued to wear on the transfer tube until complete disengagement of the splines occurred. The investigation was unable to determine exactly when the ballscrew quill became disconnected from the transfer tube. If the failure occurred very close to the Glynco Jetport or if the rate at which the propeller blade angle decreased was quite low, it probably would have been possible to land the airplane prior to the blade angle having reached a critical angle.

Hamilton Standard provided the Safety Board with an analysis of the sound spectrum of flight 23 1 l's last communications with air traffic control. That analysis indicates that during the last two communications with the controllers, a sound frequency was found that would correspond to a propeller rotating at 100 percent norrnal speed. Embraer performed a similar sound spectrum study and was unable to positively identify a sound spectrum that could be associated with the left propeller speed. The Safety Board believes that even if Hamilton Standards analysis was correct, it would not confirm whether the quill was engaged with the transfer tube at the moment of the communication. It was noted in the flight tests with the fully disengaged quill that the propeller speed was at 100 percent at numerous points during the tests. Therefore, the Safety Board is unable to determine conclusively whether the quill was engaged during the flightcrew's last two communications with air traffic control.

The Safety Board believes that during the flight, the normal movement of the quill on the transfer tube wore down the remaining surfaces of the quill gear teeth until the ballscrew quill became disengaged from the transfer tube during the descent and approach to the airport. The examination of other worn ballscrew quills, including the one from the right PCU of the accident airplane, revealed that the wear pattern was not uniform around the inner diameter of the quill. In several cases, the transfer tube had begun to cut into the quill forming "new" gear teeth and thus retained engagement. The ballscrew quill from the left PCU of N270AS was unusual because the wear was nearly concentric for all of the gear teeth and the wear was relatively even.

The installation of the ballscrew quill allows tolerances for alignment of propeller hub and the PCU. Therefore, it would appear that the ballscrew quill for the left PCU was better aligned than the others that were examined. The Safety Board believes that the better alignment allowed more uniform engagement of the teeth of the quill to the splines of the transfer tube. Although the teeth were very worn, there was sufficient contact area for the quill/transfer tube connection to withstand the torque loads of the feather/unfeather check before the accident flight. Additional wear during the flight subsequently led to slipping of the teeth and disengagement of the quill from the transfer tube.

2.4 Flightcrew and Airplane Performance

The Safety Board considered the possibility that the power lever for the left engine was either accidentally or intentionally brought past the flight idle stop and into the ground operation position by a crewmember during the approach.

Placing the power lever in the ground idle position and then returning it to the flight idle position would provide a substantial increase in torque on the quill that could lead to sudden disengagement of a seriously worn quill from the transfer tube. Additionally, the action of placing the power lever below the flight idle stop would result in the propeller rotating to a lower blade angle. Thus, these actions would result in the propeller being commanded to a lower blade angle and the ballscrew quill disengaging from the transfer tube. However, the Safety Board believes that such actions by the pilots are unlikely. Examination of the flight idle stops did not reveal any wear that would have allowed the power lever to be inadvertently moved below the flight idle position. Additionally, during maintenance performed on the airplane on the morning before the accident the flight idle protection system was tested and found fully operational. Thus, two separate failure events, one mechanical and one electrical, would have been required to place the PLA below the flight idle position. The simulator tests indicated that a normal approach to the airport could have been accomplished without reducing the power lever below the flight idle position. Furthermore, the Safety Board believes that the notoriety and wide dissemination of data regarding the propeller overspeed events in EMB-120s have made pilots aware of the control problems that can occur if a propeller were to overspeed. Therefore, it is doubtful that the flightcrew of flight 2311 would have intentionally or inadvertently placed the power lever below the flight idle position.

The simulation tests found that as the propeller blade angle was reduced below the 22-degree stop setting used in the flight tests, the airplane became increasingly difficult to control. Indeed, as the blade angle approached about 3 degrees, the airplane was uncontrollable. After numerous attempts, with the left propeller assuming low blade angles, the test pilot could only crash in a wings-level attitude by reducing the power on both engines to flight idle. The investigation showed that the loss of control was the result of a loss of lift over the left wing due to a reduction in aifflow behind the left propeller disk and the high drag of the left propeller. At very low blade angles, the rolling moment became too large to be counteracted by the flight controls.

The simulator tests show close agreement with the witness reports that the airplane was at a low altitude before rolling sharply to the left and pitching down. In each of the simulator tests in which the propeller blade angle reached about 3 degrees and control was lost, the pilot had to trade altitude for airspeed in order to maintain some control over the airplane until the propeller blade angle reached a point that control was lost. Increasing power to the right engine in an attempt to maintain airspeed would increase the control difficulties. Although the

simulator tests were not intended to duplicate the accident flight, in the majority of the tests with the left propeller at low blade angles, the airplane crashed in an attitude and heading similar to that of the accident airplane.

The witness statements, the examination of the propeller control components, and the simulator tests all provide compelling evidence that the loss of control of the airplane was due to the blades of the propeller having moved to a very low pitch angle during the approach to land. Associated with this event was the fact that the pilots were unable to regain control or to feather the propeller after the initiating malfunction occurred.

The geometry of the flightpath dictates that if the quill were engaged during the last communication from flight 2311 and if the rate of reduction in propeller blade angle was between 5.5 and 7.5 degrees per minute, the airplane would not have crashed where it did and a successful landing would have been possible. Therefore, the quill must have been disconnected prior to the last communication or the rate of reduction in propeller blade angle must have been greater.

The flight tests indicated that the rate of reduction in propeller angle could be influenced by such factors as airplane attitude, airspeeds, PLA, and rate of PLA movement. Because there was concern over the safety of additional flight tests, further flights to develop additional data on the effects of these factors were not attempted. However, the flight test pilots stated that the first indication of a problem was the propeller speed surpassing 100 percent. The proper procedures for a pilot to follow upon suspicion of an overspeeding propeller would be to reduce PLA and airspeed to gain control of the propeller. To quickly reduce airspeed the pilot would increase the airplane's angle of attack. The Safety Board cannot rule out the possibility that a rapid change in airplane attitude, with the resulting change in propeller angle of attack and gyroscopic forces, could induce rates of propeller blade angle change greater than those experienced in the flight tests.

All of the Safety Boards flight tests were conducted with a disengaged quill at the start of the test. A dynamic disengagement, or a quill going from engaged to disengaged in flight, was not attempted during the Safety Boards flight tests. Embraer has since informed the Safety Board that it conducted additional flight tests to evaluate dynamic propeller decoupling. Dynamic decoupling was achieved by modifying a transfer tube so that when propeller speed was commanded above a predetermined setting the quill would move to an area on

the transfer tube splines where the splines had been removed. The Embraer data indicated that pitch change rates as high as 23 degrees/second were recorded during these tests. Thus, the Safety Board believes that the propeller blade angle change rate was substantially greater for the accident flight than the rates found during the flight tests. Therefore, the Safety Board believes that the time between the loss of engagement between the quill and the transfer tube on flight 2311 and the loss of control of the airplane may have been substantially less than the intervals observed in the simulation flights.

Following the flight tests conducted in the presence of the Safety Board, the test pilots stated that they did not perceive any problem with the airplane until the propeller blade angle was between 24 and 26 degrees. They stated that the airplane became very difficult to control after the propeller reached the 22-degree stop. Therefore, it is most likely that the pilots of flight 23 11 did not notice a problem with the airplane until the propeller began to overspeed and roll control was affected. In such an event, their primary focus would have been directed at maintaining control of the airplane and isolating the cause of the problem. The flightcrew probably would not have had the opportunity to communicate with air traffic control or the company's ground station at Brunswick. The flight and simulator tests indicated that it was unlikely that the flightcrew would have been able to prevent the accident after the quill became disconnected from the transfer tube. During the simulation flights, Embraer's senior flight test pilot could, after numerous simulation attempts, only maintain the airplane in a wings-level attitude, until it crashed well short of the airport, after both engines were shut down. Moreover, the rate of the propeller blade angle reduction may have been substantially greater for the accident flight, allowing less time for the pilots to have considered shutting down the engines prior to the loss of control. Therefore, the Safety Board finds that the flightcrew of flight 23 11 could not have avoided the accident.

2.5 Propeller System Certification

The investigation found that wear of the quill was not considered during the certification of the propeller system because of the very light torque loading on the quill during flight. Service history of the PCU quill prior to the introduction of the titanium-nitrided transfer tube indicted that quill spline wear was not a problem. Additionally, the manufacturer provided an analysis during certification indicating that even in the event of a failure, the propeller would either drift into the feathered position or maintain the blade angle present when the failure occurred. However, the accident involving flight 2311 and the subsequent

investigation have determined that these assumptions, though originally supported by numerous engineering evaluations and manufacturing experience, are invalid and that there are single failure modes that could result in an uncommanded propeller blade angles below flight idle.

The Safety Board notes that there have been four reported instances of extreme wear of the PCU servo ballscrew, one of which was discovered in flight. The worn parts were not in contact with a titanium-nitrided surface or a surface that had a finish rougher than allowed in the specifications. Therefore, the wear of the servo ballscrew is another case where wearing of the components was not considered in the certification. The Safety Board believes that if the engagement between the ballscrew and the quill fails it would be possible for the propeller blade angle to rotate below the flight idle angle, resulting in loss of control of the airplane. Therefore, the Safety Board concludes that the Hamilton Standard model 14RF propeller system does not comply with the purpose of the certification requirements contained in 14 CFR section 35.

The Safety Board notes that prior to the emergency airworthiness directive issued in May 1991, inspection of the PCU transfer tube or ballscrew quill was to be conducted "on condition." Thus, the part was only to be inspected if a problem was noted. The accident involving flight 2311 and a recent finding of extreme wear of the servo ballscrew quill indicate that "on condition" maintenance of a PCU, or waiting for it to fail in service prior to inspection, could result in the loss of the airplane. Therefore, the FAA should establish a periodic inspection requirement for the Hamilton Standard propeller model 14RF PCU and all similar designs.

During the flight tests, it was noted that the behavior of the propeller when the quill was disengaged was substantially different than predicted by the manufacturer's engineers and from the propeller system computer simulation model. This finding leads the Safety Board to believe that prior to this accident neither the manufacturer nor the FAA understood the potential effects of the failure modes of the propeller system and that further study is necessary. Therefore, the FAA should conduct a certification review of the Hamilton Standard propeller model 14RF and all propeller systems that are based upon a similar design philosophy.

The Safety Board is also concerned that the testing of a "shiny" titanium-nitrided coated transfer tube was accomplished in a test cell using a different manufacturer's powerplant than one which is certificated for the

EMB-120. Thus, the testing used to validate the introduction of the titanium-nitrided transfer tube did not consider the service environment of the transfer tube. Additionally, the use of a tube with a shiny or smooth surface would not produce the rapid wear that was experienced with the tubes with the "matted" surface.

The test cell and flight tests accomplished as part of this investigation found contrary behavior of the propeller with a disengaged quill. The Safety Board believes that additional testing should be accomplished with each airplane and engine combination to more fully evaluate the propeller performance and wear pattern. The need for such testing is emphasized by the fact that four instances of worn servo ballscrews have been found in EMB-120 installations and none in other manufacturer's airplanes using this propeller system.

2.6 Flightcrew Duty Time

The flightcrew's duty schedule allowed for a maximum off-duty time of 8 hours and 15 minutes on the night prior to the accident. The Safety Board believes that the flightcrew's actual rest time would have been reduced substantially to 6.5 hours or less as a result of ground transportation, meals, personal hygiene requirements, and time to check into and out of the hotel. The Safety Board believes that the pilots actually received 5 to 6 hours of sleep in preparation for duty the next day.

Although the circumstances of this accident established that flightcrew fatigue was not a factor, the Safety Board is concerned that ASA, not unlike other commuter air carriers, scheduled reduced rest periods for about 60 percent of the layovers in its day-to-day operations. The Safety Board believes that this practice is inconsistent with the level of safety intended by the regulations, which is to allow reduced rest periods as a contingency to a schedule disruption, and has the potential of adversely affecting pilot fitness and performance.

Therefore, the Safety Board believes that the FAA should reiterate and clarify to the Regional Airline Association and commuter air carriers the intent of the reduced rest provisions of 14 CFR 135.265, and should require air carriers to apply the regulation in a manner consistent with that intent.

3. CONCLUSIONS

3.1 Findings

1. The airplane was certificated, equipped, and maintained in accordance with Federal regulations and approved procedures, although the Hamilton Standard model 14RF propeller does not comply with the purpose of the certification requirements of 14 CFR Section 35.21 because of unforeseen failure modes that result in the propeller blade angle going below the flight idle position.

2. There was no failure or malfunction in the airplane, its systems or power-plants that contributed to the accident prior to loss of propeller control.

3. The flightcrew was certificated, experienced and qualified for their respective duties.

4. Events in the lives of the captain and the first officer during the 3-day period prior to the accident did not adversely affect their performance on the accident flight.

5. The left propeller blade angle at the time of impact was about 3 degrees, which is below the range for normal flight. The right propeller blade angle was above the flight idle low pitch stop.

6. The left propeller actuator did not respond to a PCU action to increase blade angle because the PCU quill spline teeth were severely worn and could not engage the transfer tube spline.

7. The titanium-nitrided coating on the transfer tube was selected to improve manufacturing efficiency compared to the originally certificated nitrided transfer tube.

8. Hamilton Standard's engineering analysis and testing of the titanium-nitrided transfer tube indicated that the use of this coating would not compromise the safety of the propeller system.

9. Mechanical wear of the transfer tube, quill, or servo ballscrew was not considered a factor during the certification process due to the relatively low torque loading on these components and the manufacturer's analysis indicating that the propeller blade angle would go to the feather position if a failure occurred.

10. The extreme and rapid wear of the nitrided quill spline teeth was the result of the sliding contact with the harder titanium-nitrided surface of the transfer tube spline.

11. The left propeller blades moved to lower blade angles due to centrifugal and aerodynamic forces during the approach to the airport. The airplane became uncontrollable at the lower blade angles because of asymmetric lift and drag forces that exceeded the limits of the airplane's lateral control authority.

12. The pilots of flight 23 11 could not have prevented the accident.

13. During flight tests, the propeller blade angles decreased until restrained by the 22-degree safety stops with a disengaged ballscrew quill. Contrary to the FAA's fail-safe design requirements, the propeller system did not feather as predicted by the manufacturer's analysis and propeller simulation model.

14. Certification testing of the titanium-nitrided coated transfer tube, accomplished in a test cell, using a different engine than that certificated for the EMB-120, did not simulate the in-flight loads and vibration environment of actual service.

15. The titanium-nitrided transfer tube used in the certification testing had a relatively smooth surface finish on its splines and did not represent the range of possible finishes that could be expected in service.

16. The transfer tube, quill, and servo ballscrew were certificated without a requirement for periodic inspection.

17. Commuter air carriers, including ASA, use the reduced rest provisions of 14 CFR Part 135 to routinely schedule reduced rest periods in daily operations, contrary to the purpose of the regulation, which is primarily to allow for scheduling flexibility.

3.2 Probable Cause

The National Transportation Safety Board determines that the probable cause of this accident was the loss of control in flight as a result of a malfunction of the left engine propeller control unit which allowed the propeller blade angles to go below the flight idle position. Contributing to the accident was the deficient design of the propeller control unit by Hamilton Standard and the approval of the design by the Federal Aviation Administration. The design did not correctly evaluate the failure mode that occurred during this flight, which resulted in an uncommanded and uncorrectable movement of the blades of the airplane's left propeller below the flight idle position.

4. RECOMMENDATIONS

As a result of its investigation of this accident, the National Transportation Safety Board makes the following recommendations:

--to the Federal Aviation Administration:

Conduct a certification review of the Hamilton Standard model 14RF propeller system and require appropriate modification to ensure that the propeller system complies with the provisions of 14 CFR Section 35.21. The certification review should include subjecting the system to the vibration spectrum that would be encountered in flight on those aircraft for which it is certificated. (Class II, Priority Action) (A-92-25)

Examine the certification basis of other model propeller systems that have the same design characteristics as the Hamilton Standard propeller model 14RF and ensure that the fail-safe features of those propeller systems will function properly in the event of unforeseen wear of components in the propeller system. (Class II, Priority Action) (A-92-26)

Establish a periodic inspection time requirement for the transfer tube splines, servo ballscrew and ballscrew quill on Hamilton Standard model 14RF propellers and other propeller systems of similar design. (Class II, Priority Action) (A-92-27)

Issue an Air Carrier Operations Bulletin (ACOB) directing Principal Operations Inspectors to clarify with their operators that the intent of 14 CFR Section 135.265 is not to routinely schedule reduced rest, but to allow for unexpected operational delays, and to require compliance with the intent of the regulation. (Class II, Priority Action) (A-92-28)

--To Atlantic Southeast Airlines, Inc.:

Discontinue the scheduling of reduced rest periods in flight operations; and, in the interest of flight safety, utilize reduced rest periods for operational contingencies consistent with the intent of 14 CFR 135.265. (Class II, Priority Action) (A-92-29)

--To the Regional Airline Association:

Advise your members that the intent of the reduced rest provisions of 14 CFR 135.265 is not to routinely schedule reduced rest, but, consistent with flight safety, to allow for unexpected operational delays, and urge them to comply with the intent of the regulation. (Class II, Priority Action) (A-92-30)

BY THE NATIONAL TRANSPORTATION SAFETY BOARD

Susan Coughlin
Acting Chairman

John K. Lauber
Member

Christopher A. Hart
Member

John Hammerschmidt
Member

James L. Kolstad
Member

April 28, 1992