Federal Register

Friday
May 16, 1986

Part III

Department of Transportation

Federal Aviation Administration

14 CFR Part 25

Airworthiness Standards; Fire Protection Requirements for Cargo or Baggage Compartments; Final Rule

DEPARTMENT OF TRANSPORTATION

Federal Aviation Administration

14 CFR Part 25 See correction

[Docket No. 24185; Amdt. No. 25-60]

Airworthiness Standards; Fire Protection Requirements for Cargo or Baggage Compartments

AGENCY: Federal Aviation Administration (FAA), DOT.

ACTION: Final rule.

SUMMARY: This amendment upgrades the fire safety standards for cargo or baggage compartments in transport category airplanes by establishing new fire test criteria and by limiting the volume of Class D compartments. This amendment is the result of research and fire testing and is intended to increase airplane fire safety.

EFFECTIVE DATE: June 16, 1986.

FOR FURTHER INFORMATION CONTACT: Gary L. Killion, Manager, Regulations Branch (ANM-112), Transport Standards Staff, Aircraft Certification Division, FAA, Northwest Mountain Region, 17900 Pacific Highway South, C-68966, Seattle, Washington 98168; telephone (206) 431-2112.

SUPPLEMENTARY INFORMATION:

Background

This amendment is based on Notice of Proposed Rulemaking (NPRM) No. 84-11, which was published in the **Federal Register** on August 8, 1984 (49 FR 31830). The notice proposed to upgrade the fire safety standards for cargo or baggage compartments in transport category airplanes by establishing new fire test criteria and by limiting the volume of Class D compartments.

As discussed in the notice, there are five classes of cargo compartments (Class A, B, C, D, and E) in the existing Part 25 regulatory classification system. The classification of compartments is based primarily on the ease of access and the capability of the compartment to contain a fire. With the exception of the Class A compartment, all categories of cargo compartments are required to have liners in order to protect the structural integrity of the airplane from the effects of fire.

The FAA conducted a series of tests at its Technical Center to investigate the capability of three typical liner materials to resist flame penetration under conditions representative of actual cargo or baggage compartment fires. The tests were conducted in simulated Class C and D compartments with bulk-loaded baggage typical of that found in actual service. In conjunction with these tests, the FAA developed a method of testing liner materials utilizing a 2 gallons-per-hour kerosene burner. The materials—fiberglass, Kevlar and Nomex—comprise the primary liner materials currently used in domestic jet transport airplanes.

As a result of these full-scale tests, it was found that a fire could rapidly burn through Nomex or Kevlar under representative conditions. In addition to the fire hazards associated with the initial flame penetration, further suppression of the oxygen in compartments would be hindered. This, in turn, could result in a fire of increased intensity. It was therefore concluded that improved standards are warranted for the sidewall and ceiling liner panels of all classes of cargo or baggage compartments that depend on liners for fire control. Considering probable flame path, the FAA determined that it is not necessary for the materials used for bottom liner panels to meet these improved standards.

The full-scale tests conducted at the FAA Technical Center also showed that a limitation on the volume of Class D compartments is warranted. These tests indicated that the intensity of a fire in a Class D compartment is dependent on compartment volume as well as the sum of compartment volume and the volume of leakage from the compartment in a given period of time. In this regard, it was found that the intensity of a fire in a larger Class D compartment is much greater due to the total amount of oxygen available in compartments larger than approximately 1,000 cubic feet and is, therefore, beyond the capability of the liner to resist flame penetration. Accordingly, the volume of a Class D compartment would be limited to a maximum of 1,000 cubic feet.

The comment period for this notice originally closed on October 8, 1984. It was reopened, as announced in Notice 84-11A (49 FR 40041; October 12, 1984), because of requests received from persons desiring more time in which to study the proposal and prepare their comments. The comment period was further reopened, as announced in Notice 84-11B (50 FR 13226; April 3, 1985), in light of requests received after further tests were conducted by the FAA at its Technical Center. One commenter requested that the FAA reopen the comment period for an additional period; however, the reason given was not considered sufficient to warrant such action. Although the comment period closed on June 3, 1985, late comments have been considered in accordance with 14 CFR 11.47(a). All interested parties have thus been given ample opportunity to participate in the making of this final rule, and due consideration has been given to all matters presented. Except for the changes discussed below, this final rule and the reasons for its adoption are the same as those stated in Notice 84-11.

Discussion of Comments

The numerous comments receive in response to Notice 84-11 represent the views of airplane and equipment manufacturers, airplane operators, material producers and testing laboratories, airplane crew organizations, U.S. and foreign government organizations, and consumer groups. The vast majority of commenters endorse the intent of the proposals of Notice 84-11, although some suggest modifications to the proposed requirements. The following FAA responses to comments are discussed according to the subject matter of the comment.

One commenter believes the justification for the proposed standards to be deficient in analysis. In this regard, the commenter states that the basis for the proposed rule was a catastrophic fire which occurred on a Lockheed L-1011 airplane and that the standards are a reaction to a preconceived notion that Kevlar and Nomex are less desirable than fiberglass since the proposed test methods do not relate to an actual fire scenario. The commenter contends that there is nothing in the analysis to indicate that the results of the L-1011 accident would have been prevented if fiberglass liners had been installed.

The proposed standards are not based on a scenario derived from an analysis of the L-1011 accident, but rather are based on full-scale testing that was conducted with simulated Class C and D compartments using bulk-loaded baggage. The full-scale tests showed that fiberglas as typically used in cargo or baggage compartments, is superior to Kevlar or Nomex from a flame penetration standpoint. The more significant result of these tests is, however, the fact that existing standards for liner materials do not provide adequate protection from a typical cargo or baggage compartment fire. In this regard, it must be noted that liners constructed of Kevlar or Nomex, as well as those of fiberglass, meet the current standards. Because it would be impractical to conduct a full-scale test to qualify each type of material, the FAA developed test methods that would provide results comparable to those of a full-scale test from a materials qualification standpoint. As a result of this correlation, the proposed test methods do, in fact, relate to an actual

fire scenario. As explained in Notice 84-11, the L-1011 accident cited by the commenter was *assumed* to have resulted from a fire in the cargo or baggage compartment for regulatory analysis purposes. The analysis notes that the specific cause of the fire is the subject of considerable dispute.

Several commenters present views supporting or opposing application of the proposed standards to airplanes already in service. Because such action would be beyond the scope of the notice, the comments are not considered relevant to this rulemaking. The FAA is, however, considering additional rulemaking that will address this issue.

One commenter contends that although reinforced with fiberglass and using state-of-the-art resins, almost all ceiling liners and some sidewall liners that are used in the current jet transport fleet do not meet one or more of the proposed requirements in the notice. The commenter also contends that materials which simultaneously satisfy the functional requirements for ceiling and sidewall liners, as well as the proposed fire safety standards, are not available. These contentions are not supported by the testing conducted. As noted in FAA Technical Note DOT/FAA/CT-TN85/11, An Evaluation of the Burn-Through Resistance of Cargo Lining Materials, dated April 1985, there are a number of suitable liner materials that meet the standards and are available. A copy of this technical note has been placed in the Rules Docket.

One commenter contends that additional FAA and industry developmental work is clearly required prior to issuance of regulatory material to establish test apparatus, procedures, and evaluation criteria that will accomplish the intent of the proposed rule. The FAA does not agree. Testing has shown that the proposed standards do realistically discriminate between acceptable and unacceptable liners, and any further development work would unnecessarily delay introduction of improved liners in service.

One commenter supports the notice, but is concerned that the research and development testing did not account for the possible presence of hazardous materials in the cargo compartment. While any consideration of a regulation addressing the effects of hazardous materials would be beyond the scope of the notice, it is noted that standards concerning the carriage of hazardous materials are contained in Chapter I of Title 49, Code of Federal Regulations (CFR).

Although two commenters consider the proposed standards to be too stringent, these standards have been shown to be necessary by full-scale testing and achievable with currently available materials. One of these two commenters further states that smoke and toxicity should also be addressed. Such standards would be beyond the scope of the notice and could not be considered at this time. It should be noted, however, that existing § 25.831 provides standards for crew and passenger compartment ventilation and evacuation of smoke. While there is evidence of the need for improved standards with respect to flame penetration, the FAA does not have evidence that the existing standards of § 25.831 do not provide adequate protection from smoke and toxicity. Standards for toxicity would be especially difficult to establish because there has not been sufficient research to adequately define acceptable levels of human tolerance to typical cargo or baggage compartment fire toxicants.

One commenter proposes the use of a "total flood" of extinguishing agent in lieu of improved standards for the liners. Similarly, another commenter believes the standards should give credit for an active fire extinguishing system by allowing the use of liners with less resistance to flame penetration than that proposed in the notice. These concepts are considered inadequate because liners with less ability to resist flame penetration are likely to fail very quickly before the extinguishing agent is effective, allowing the extinguishing agent to escape and rendering the extinguishing system inoperative.

One commenter compares the proposed standards for cargo or baggage compartment liners with the guidance in Advisory Circular AC 20-107A, Composite Aircraft Structure, for composites that are required to be fire-resistant. The commenter believes that the proposed standards are too stringent when compared to the standards for composite materials, considering that a fire in a cargo or baggage compartment would be less severe (according to the commenter) due to the limited amount of oxygen available. The comparison of the proposed standards with the guidance for composite materials is not appropriate because the purposes differ. The proposed standards for cargo or baggage compartments are intended to safely contain a fire. The guidance for composite materials is, on the other hand, to ensure that the structural integrity of the materials will be maintained during exposure to a fire.

Two commenters believe that the rulemaking for improving fire safety in air carrier airplanes is proceeding faster than the fire safety technology. The FAA has determined that the technology exists for compliance with these new standards and that consequently the manufacturers can design liners for cargo and baggage compartments that meet the new standards.

Two commenters support the proposed standards for Class C and D compartments, but not for Class B or E compartments. A Class B compartment is typically the large cargo portion of the cabin in a combination passenger and cargo carrying airplane (frequently referred to as a "combi" airplane). A Class E compartment is the main cabin of an airplane used only for the carriage of cargo. Both Class B and E compartments may be dedicated solely to the carriage of cargo or may be convertible passenger or cargo compartments. (Airplanes with convertible compartments are frequently referred to as "quick change (QC)" airplanes.) The seats of QC airplanes are generally installed on pallets so that they can be removed rapidly for the carriage of cargo. The sidewalls, bulkheads and ceillings of the passenger interior then serve as the liners of the cargo compartments. Like Class C compartments, Class B and E compartments are required to have smoke or fire detection systems to give warning at the pilot or flight engineer station. For fire extinguishment, Class B compartments are required to have sufficient accessibility to enable a crewmember to effectively reach any part of the compartment with the contents of a hand fire-extinguisher. Class E compartments must have means to shut off the ventilating airflow and to exclude hazardous quantities of smoke, flames or noxious gases from the flightcrew compartment. Class B and E compartments, therefore, do not depend on the integrity of the liner to retain the agent from a built-in extinguishing system, as in a Class C compartment, or to limit the supply of oxygen, as in a Class D compartment.

Based on the lack of adverse service experience with Class B and E compartments to date, and the lack of full-scale test data that are directly applicable, the FAA concurs that the liners of these compartments need not meet the new standards. This does not preclude future rulemaking to require such liners to meet these standards if warranted by further service experience or testing.

Several commenters have presented opposing views concerning Class D compartments. Some contend that the proposed 1,000 cubic feet limitation of the volume of a Class D compartment is too restrictive. One commenter suggests that the rate of ventilation and leakage

for Class D compartments should be as low as practicable and should not exceed the following formula, which (according to the commenter) has been an acceptable means of compliance with the objective requirements of current § 25.857(d):

$W = 2{,}000 - V$

Where W = ventilation and leakage airflow in cu. ft. hr.

V = compartment volume in cu. ft.

One commenter further suggests that the burner heat flux density, flame temperature, and time of application, should be redefined to reflect conditions to be established by the FAA Technical Center by further testing for a Class D compartment that is greater than 1,000 cubic feet, but meets the above formula. As discussed in the notice, the tests conducted at the FAA Technical Center indicated that the intensity of a fire in a Class D compartment is dependent on compartment volume as well as the sum of compartment volume and the volume of leakage in a given period of time. In this regard, it was found that the intensity of a fire in a larger Class D compartment is much greater due to the total amount of oxygen available in compartments larger than approximately 1,000 cubic feet, and beyond the capability of the liner to resist flame penetration. While the leakage rate is an important consideration, a low rate does not mitigate the need to limit the total volume of a Class D compartment to 1,000 cubic feet. The more stringent standards that would be needed to safely contain a fire in a compartment greater than 1,000 cubic feet would be beyond the scope of the notice.

Other commenters, in contrast, believe that Class D compartments should be eliminated altogether. One commenter is concerned that a fire may originate in a Class D compartment that is nearly empty, grow out of control due to the greater amount of oxygen available, and spread to an adjacent compartment that does have combustible cargo or baggage. This scenario is considered unrealistic because the compartment in which the fire originates is unlikely to contain enough combustible materials to sustain an intense fire for an extended period if it is nearly empty. In this regard, the scenario presupposes, first, that the combination of compartment volume and leakage airflow and liner integrity are inadequate to safely suppress and contain the fire in the original compartment and, second, that the liner of the adjacent compartment is incapable of preventing burn-through in reverse. In light of the testing conducted, the proposed standards would make both suppositions unlikely. The same commenter is concerned that in-service damage to liners may allow additional leakage airflow and compromise the capability of the liner to suppress a fire. The FAA notes the commenter's concern and concurs that the use of improved materials will increase the capability of the liners to suppress fires only if the integrity of the liners is maintained in service. In this regard, the FAA is presently emphasizing to operators the importance of properly maintaining the liners in all cargo or baggage compartments that are required to have liners and has stepped up surveillance of airline maintenance of cargo compartment liners. The commenter is also concerned about the failure of a ventilation control valve in a Class D compartment which, the commenter alleges, was the cause of the previously discussed Lockheed L-1011 accident. As also noted previously, the cause of the fire involved in that accident is a matter of considerable dispute, and has not been attributed to such a failure.

One commenter supports the proposed limitation of the volume of a Class D compartment to 1,000 cubic feet but believes a specific limitation on leakage airflow should also be imposed. The FAA concurs that the leakage airflow rate is an important factor. Such leakage must be considered for compliance with the objective requirements of current § 25.857(d)(1). As these objective requirements would remain applicable, it is not considered necessary to establish a specific limitation on leakage airflow.

Two commenters recommend that the FAA require fire detection systems for Class D cargo compartments so that the flightcrews would be alerted to the existence of a fire. Another commenter recommends that all cargo compartments, except Class A and B, should be classified as Class C. While these recommendations are beyond the scope of the notice, neither is considered to be warranted. As discussed above, the full-scale and other fire tests have shown that Class D compartments provide an acceptable level of safety if liners meeting the new standards are used and the volume does not exceed 1,000 cubic feet. As discussed below, the present standards are considered to provide an acceptable level of safety for Class B and E compartments.

One commenter notes that standards for flammability of seat cushions have been adopted (Amendment 25-59; 49 FR 43188; October 26, 1984) since the time Notice 84-11 was issued and believes that many of the elements of the testing required for seats are also appropriate for liner testing.

Although there are necessary differences due to the nature of tests, the FAA concurs that the test methods and procedures should be the same wherever possible. The adopted test procedures have been changed accordingly.

One commenter recommends that the burner heat flux density, flame temperature, and time of application should be redefined to reflect the conditions to be established for a Class C compartment with a properly operating fire detection and extinguishing system. Based on the full-scale tests conducted, the FAA considers that the proposed criteria do simulate the exposure conditions (including burner heat flux density, temperature, and duration) of a realistic cargo fire in a Class C compartment equipped with detectors that provide indication of a fire within one minute, as required by existing § 25.858. The proposed standards are, therefore, considered appropriate in this regard and have been adopted in this final rule.

Several commenters suggest test specimen sizes other than the proposed 16 x 25 inches. One commenter recommends the use of 16 x 24 inch specimens in order to reduce waste when specimens are cut from a standard 4 x 8 foot sheet. The FAA concurs with this recommendation and the requirement has been changed accordingly.

As proposed, ceiling and sidewall liners would have to meet the improved standards while floor panels would only have to meet the current standards. Two commenters believe that flooring should also meet the higher standards; however, their position is not supported by the results of the full-scale testing. Such tests have shown that fires tend to burn upward, and there is little or no involvement of flooring. The improved standards are, therefore, not warranted for flooring.

In lieu of the proposed test panel size and positioning, one commenter suggests the use of a 610 mm x 610 mm panel centered horizontally 203 mm above the flame. Alternate panel sizes and positioning could be used under the equivalent safety provisions of § 21.21(b)(1) of this chapter provided the tests yield the same results. The suggested change is, therefore, unnecessary. The same commenter believes that negative test results should not preclude the use of aluminum as liner material. The FAA does not concur because, for reasons stated earlier, the FAA considers the proposed standards

to be the minimum required for safety. Testing conducted subsequent to Notice 84-11 has shown that aluminum sheet, in thicknesses typically used for liners, does not meet the proposed standards.

Several commenters express related concerns that the proposed rule would require only the basic panel material to be tested and that design features, such as joints, structural attachments, lamp units, lashing points and pressure relief panels, would be omitted. In this regard, one commenter contends that the proposed test seems to confuse two objectives: The need to demonstrate the ability of a material to resist flame penetration and the need to demonstrate fire containability of a "simulation" of the ceiling and sidewall. The commenter states that view A-A of Figure 1 of the notice shows the edges of the panel held in a manner that is not representative and is not therefore a "simulation" that will test a design detail.

In response to the commenter's concerns, the term "liner," as used in § 25.855(a-1), includes any design features that would affect the capability of the liner to safely contain a fire. Such features would, therefore, have to be tested along with the basic panel material unless they have been previously found satisfactory. For example, joints that are constructed with fireproof fasteners and are not subject to gaps caused by distortion need not be tested. On the other hand, the test specimens would include joints constructed with nonfireproof fasteners or joints subject to distortion. Similarly, test specimens woud include lamp lenses, if failure of the lenses would allow flames to pass; however, lamps need not be included in the test specimen if the lamp incorporates a fireproof body that would prevent passage of flames. The test acceptance criteria have been clarified in this regard. One commenter also contends that the apparatus assumes that the sidewall will be vertical, which is not always the case. Tests have shown that results obtained with vertical panels are also representative of sidewalls that are inclined; therefore, the FAA considers the test apparatus to be appropriate in this regard.

One commenter suggests that it is unnecessary to test ceiling and sidewall panels simultaneously. The FAA concurs that it is not necessary to test ceiling and sidewall panels simultaneously; and it may, in some instances, be advantageous to test the panels separately. For example, material tested as a ceiling panel with a baffle installed to simulate the missing side panel would be qualified for use as ceiling material with any otherwise qualified sidewall material. Furthermore, the material would also be qualified for use as sidewall material due to the test heat transfer characteristics. On the other hand, a material tested as a ceiling panel simultaneously with a sidewall panel would be qualified for use only with sidewalls of the material used in the sidewall test panel.

One commenter believes that the use of alternate burners should be allowed. The commenter notes that kerosene burners with improved adjustment and controlling devices are available and that gas-type burners could also be used. The proposed standards note that two particular burner models have been used in the past, but the standards do not specifically require use of those particular models. Any burner that meets the proposed standards could, therefore, be used. Other burners, such as gas-type burners, could be used under the equivalent level of safety provisions of § 21.21(b)(1) of this Chapter provided they are shown to give the same test results.

Two commenters believe that the test fixture should be revised to allow a baffle to be placed around the liner. The baffle would simulate a ceiling and thereby prevent the piloted ignition of combustion gases released by the test specimen. Such use of a baffle is not considered appropriate because combustible gases released from liner materials could reignite outside the compartment and contribute to the hazard in an actual cargo or baggage compartment fire. Furthermore, there are currently available materials constructed with resins that do not release such combustible gases.

The proposed burner test fuel is defined as "kerosene." One commenter believes that this term is too board and notes that its use has led to problems in testing both cargo or baggage compartment liner materials and seat cushions. The FAA concurs and notes that the test fuel for the recently adopted seat cushion flammability standards (Amendment 25-59; 49 FR 43188; October 26, 1984) is defined as "#2 kerosene or equivalent." For consistency, the fuel for testing cargo or baggage compartment liners will also be defined as "#2 kerosene or equivalent."

The proposed burner cone is 12 inches wide at the exit. As equipment already in use incorporate burner cones that are 11 inches wide, one commenter recommends specifying that this dimension should be specified as 11.5±0.5 inches in order to accommodate both sizes. It appears that such a variation in burner cone area would cause variations in burner heat output and inconsistencies in test results. Use of the 11-inch wide cone specified for the recently adopted seat flammability standards (Amendment 25-59; 49 FR 43188; October 26, 1984) would eliminate the need for two separate cones while still assuring consistency of test results. The test apparatus specified for these tests has been changed accordingly.

Two commenters recommend conditioning the test specimens to 50±5 percent relative humidity prior to testing. The FAA concurs. In order to assure consistent test results, the test specimen criteria will include such conditioning.

One commenter notes that there are brief excursions below the minimum temperature on any one thermocouple due to the transient nature of a fire. The commenter suggests that these excursions can be as great as 100°F. and as frequent as several seconds apart. In order to accommodate a temperature measuring device that takes periodic instantaneous readings rather than a continuous reading, the commenter recommends using the average of temperature and heat flux over a representative exposure time, e.g. one minute, in lieu of the minimum values. In general, it appears that such averaging would not ensure the intended level of safety. A temperature measuring device of this nature could, however, be used under the "other equivalent methods" provisions of § 25.855(a-1)(1) provided it is shown to provide test results equivalent to those that would be obtained with continuous reading devices.

One commenter suggests the proposed acceptance criteria that self-extinguishing time must be less than 15 seconds and that glow time must be less than 10 seconds are unnecessary. The FAA concurs that materials that meet the proposed burn-through criteria will inherently have satisfactory self-extinguishing and glow characteristics, and these criteria have been deleted.

Two commenters suggest increasing the measured limit 4 inches above a tested ceiling liner to more than 400 °F. (One commenter specifically recommends 500 °F.) Although the temperature measured at this point varies depending on the weave and resin of the material tested, tests have shown that many materials are capable of meeting the proposed limit. The proposed limit of 400 °F. is, therefore, considered appropriate.

One commenter believes that the standards should be more precise as to

what kind of heat energy shall be measured, i.e., heat radiation only or the total heat flux consisting of radiation and convection. The notice specifies total flux. To avoid possible confusion, a Foil Type Gardon Gage total heat flux calorimeter is specified.

One commenter recommends establishing the following tolerance for the thermocouple calibration temperature: a 1700 °F. minimum temperature averaged over the seven thermocouples with a maximum lower deviation for any one thermocouple of 100 °F. The FAA concurs that the standards must allow a tolerance in this regard as a matter of practicality. The rule is changed accordingly.

One commenter suggests that the test time be measured to flame penetration *or* test completion. The FAA concurs that this change is needed to cover tests in which the test is successfully completed without any penetration. The rule is changed accordingly.

One commenter requests an additional requirement to record the flame time after removal of the flame source and the glow time. As noted earlier, these criteria are unnecessary for materials that meet the proposed burn-through criteria. This addition is, therefore, unwarranted.

Since the time Notice 84–11 was issued, existing Appendix F of Part 25 has been reidentified as Appendix F, Part I, and new standards for flammability of seat cushions have been added as Appendix F, Part II by Amendment 25–59; (49 FR 43188; October 26, 1984). The new standards for cargo or baggage compartments are, therefore, added as Appendix F, Part III. Other nonsubstantive conforming editorial changes, including that to § 25.853(b), have also been made. Furthermore, minor nonsubstantive changes have been made to the test procedures.

Regulatory Evaluation

I. Cost Benefit Anaylsis

A. Costs

The costs of the amended regulations included in this final rule will result primarily from the additional fuel consumed by the airplanes subject to the rule as a result of the slight increase in airplanes weight necessary to comply with the new standards. The airplanes that would be affected are those newly designed transport category airplanes for which an application for type certificate is made on or after the effective date of the final rule. The precise number of airplanes which will be affected cannot be accurately predicted because of the uncertainties in the number of future airplanes designs and the number of airplanes of each design that will be produced. The estimated costs of this final rule have, therefore, been based upon average total costs for a typical type certificate issued, rather than overall costs for all future airplanes types which may be certificated under the new standard. (This differs slightly from the methodology used in Notice 84–11, where fuel penalty costs were presented on an hourly basis.) Further, in developing the average total costs per type certificate issued, the FAA has estimated that a newly type certificated airplanes will have a production run of approximately 1,000 airplanes, and that each airplane will have an average life of 60,000 hours, yielding a total of 60 million flight hours for all airplanes produced under a typical type certificate. Because both the costs of this rule, and the benefits of reduced exposure to the risk of a catastrophic cargo compartment fire, will be realized simultaneously during actual operation of the airplanes, the ratio of costs to benefits will remain unchanged regardless of the level of activity in any given year over the 40 to 50 year period during which airplanes produced under a type certificate will remain in active service. Thus, comparison can be made in the form of total costs and benefits for all airplanes produced under one type certificate, rather than in the form of discounted present values, which would necessitate making arbitrary assumptions about the rate of airplane production, activity, and attrition during each year of the 40 to 50 year period.

Of the materials which meet the more stringent flame penetration standards adopted in this final rule, fiberglass is currently considered the most feasible material for use as sidewall or ceiling panels of cargo or baggage compartments. This material is somewhat heavier than Kevlar or Nomex, the other two liner materials currently used in transport category airplanes. According to data compiled by the FAA, Boeing achieved a weight savings of approximately 150 pounds in each Model 767 airplane by using Kevlar instead of fiberglass for the ceiling and sidewall panels. Because the Model 767 falls approximately in the middle of the size range of existing transport category airplanes, the FAA has assumed, for purposes of this analysis, that a typical affected transport category airplane would incur an average weight penalty of approximately 150 pounds as a result of the need to use fiberglass liner materials in lieu of lighter alternatives, such as Kevlar or Nomex. This, of course, is based on the further assumption that no new lightweight materials are developed which would meet the higher flame penetration standard.

Data compiled by the National Aeronautics and Space Administration (NASA) indicate that each additional pound of weight added to a transport category airplane results in an average additional fuel consumption of about 15 gallons per year per airplane, or an average of .006 gallons per hour based upon an average utilization rate of 2,500 hours per year per airplane. At the current jet fuel price of $.85 per gallon, and 1,000 airplanes flying a total of 60,000 lifetime hours each, the total additional fuel cost attributable to the heavier liner material will be approximately $46 million for each future type certificate that is issued. This cost will be incurred over a period of 40 to 50 years, and equates to about $46 thousand per airplane distributed over the lifetime of that airplane. Actual costs can be expected to be less than this estimate because of expected improvements in the fuel efficiency of new technology engines.

Cargo or baggage compartments larger than 1,000 cubic feet in volume may currently be designed as Class D compartments in lieu of Class C compartments with smoke or fire detection and fire extinguishment systems. Under the terms of this amendment, compartments of this size in affected airplanes would have to be designed as Class C compartments. The FAA estimates that an average weight penalty of 150 pounds per affected airplane would result from the installation of smoke or fire detection and extinguishment systems in the Class C compartments that, in the absence of the rule change, would have been designed as Class D compartments. This will result in an additional $46 million total weight penalty per type certificate for all airplanes built under type certificates which are also affected by this provision of the final rule.

Further, the cost of the smoke or fire detection and extinguishment systems must also be considered (this cost factor was erroneously omitted from the evaluation of Notice 84–11). The FAA estimates that system equipment, installation by the airframe manufacturer, and interest will add approximately $10,500 to the cost of each airplane purchased, yielding a total additional cost of $10.5 million per type certificate for the approximately 1,000 airplanes estimated to be built under a future type certificate. Although each individual airplane cost represents a capital expenditure, the total cost will

be spread over the entire production run of an airplane model produced under a type certificate, and further annualized by the purchaser of each airplane produced. Consequently, these detection and extinguishment system costs will be incurred over a period of 20 to 30 years. They have, therefore, been presented in the form of total costs rather than in the form of discounted present values for the same reasons discussed previously with respect to fuel costs.

The total cost of the liner material weight penalty, detection and extinguishment system weight penalty, and detection and extinguishment system equipment is estimated to be $102 million per type certificate for those future designs which will be affected by both the amended Class D volume constraint and the new liner material standard. These total costs will be incurred over a period of 40 to 50 years, and equate to about $102 thousand per airplane distributed over the lifetime of that airplane. It must also be noted that relatively few existing transport airplanes have Class D compartments which are larger than 1,000 cubic feet in volume. There are currently only three airplane designs in domestic use with such compartments (the McDonnell Douglas Models DC-8 and DC-10, and the Lockheed Model L-1011). Therefore, assuming no major change in the size distribution of transport airplanes, a relatively small proportion of airplanes type certificated in the future is expected to be affected by the reduction in the maximum allowable volume of a Class D compartment.

Some commenters stated that, in its analysis, the FAA neglected to consider costs related to design features such as panel joints, lamp assemblies, pressure relief panels, structural attachments, etc. These costs, if any, are considered negligible. This final rule applies only to new airplane designs; therefore, there are no redesign costs involved. Furthermore, most of the components and design techniques which are currently in use will meet the new standards. For the few instances in which current components or techniques cannot be used, the designer can choose to use other equivalent components or techniques that will meet the new standards and are currently available.

B. Benefits

The potential benefits of these rule changes are the avoided losses of life and property which would have resulted from those airplane fires that may be prevented by the provisions of the final rule. While a relatively minor benefit will result from the use of fiberglass, which is slightly less expensive to purchase than Nomex or Kevlar, this cost saving is overshadowed by the saving of the total cost of a new airplane or the benefits of accidents prevented over the lifetime of an airplane design. Quantifying these benefits is somewhat difficult because most transport category airplanes currently in service have liners constructed of fiberglass materials which already meet the new standards, and because relatively few have Class D compartments which are larger than 1,000 cubic feet in volume.

Because of the limited number of airplane models currently in service which do not meet the new standards, a Poisson distribution has been used to estimate the probability of preventing random cargo compartment fire accidents during the total service life of a newly designed transport category airplane which is type certificated in accordance with the new standards. (This probability approach is somewhat different than the method used in Notice 84-11, in which a maximum possible accident rate was estimated.) The Poisson distribution provides a realistic model for predicting many random phenomena and frequently is used in safety analysis to estimate future accident risk. The Poisson distribution of potential catastrophic cargo compartment accidents provides a base line from which the potential benefits of the rule change can be measured. Because it is unlikely that the new liner standards or the Class D volume constraint can effectively prevent a catastrophic accident from developing in every possible fire scenario, a sensitivity analysis has been completed to compare the probable benefits which would result if the new standards were effective in 100 percent, 70 percent and 50 percent of the fire scenarios.

In order to develop the Poisson distribution for this analysis, it is necessary to determine the historical average rate of catastrophic cargo compartment fires. Of the three major transport category airplane models currently in service with liner materials that do not meet the new flame penetration standards, only one has been in service for an extended period of time. This is the Lockheed L-1011, which uses Nomex as the liner material in its cargo or baggage compartments. (The other two airplanes, Boeing Models 767 and 757, use Kevlar as the liner material, and each has been in service for only about three years.) Since the Model L-1011 entered service in 1972, it has experienced one catastrophic fire that was possibly related to the cargo compartment. The specific origin or cause of this fire is the subject of considerable dispute; however, for the limited purposes of this document, it will be assumed that the fire originated in the cargo compartment. Based on these assumptions, the limited service experience with the Model L-1011 suggests a mean rate of one catastrophic cargo compartment fire accident in the total service life of all airplanes built under a type certificate which does not require compliance with the new standards. This mean rate of one may be used to develop the Poisson distribution of the probability of accidents which could be experienced by a future design which does not comply with the new liner material standards. The FAA believes that this is a conservative estimate of the mean accident rate because the current accumulated flight time of all Model L-1011 airplanes is far less than the 60 million hours of total flight time estimated in this analysis to be accumulated by all airplanes produced under a typical future type certificate.

Further, the same mean accident rate of one has been used to estimate benefits for those future designs which will be affected by the Class D volume constraint as well as the new liner material standard. Although it stands to reason that a greater safety benefit will be realized for those airplanes for which both fire protection deficiencies (Class D volume and liner material) is corrected, there have been no actual cargo compartment fire accidents that have been attributed to the size of the Class D compartment. Nevertheless, the full-scale tests conducted at the FAA Technical Center clearly indicated that the intensity of a fire in larger Class D compartments can become so great that the capability of the liner to resist flame penetration is exceeded. In the judgment of the FAA, a mean rate of one catastrophic cargo compartment accident is a reasonable compromise between the service history of existing noncompliant airplanes and the results of the laboratory tests. Therefore, this rate has been used to develop an order of mangitude estimate of the potential benefits which may be realized by those future airplane models affected by both of the new standards.

Applying the effectiveness coefficients of 100 percent, 70 percent, and 50 percent to the mean accident rate of one provides probability distributions, based upon each respective assumption about the effectiveness of the new standards, of the number of accidents which might be prevented for each future airplane design receiving a type certificate in compliance with the new standards.

The FAA estimates that the benefits which will be realized from avoiding a typical cargo compartment fire accident in the future will be the prevention of 110 passenger and crew fatalities (derived from FAA traffic data) and the loss of the airplane. Mid-size transport category airplanes which have recently received new type certificates and new designs currently under development are priced between $30 million and $60 million. The FAA, therefore, estimates that $20 million is a reasonable price for a typical used transport category airplane of the future and has used this value as the quantifiable benefit of avoiding the loss of an airplane for each accident prevented.

Based on the Poisson distribution and the alternative effectiveness assumptions discussed above, there is a 63 percent probability that one or more catastrophic cargo compartment fire accidents will be prevented, if the new standards, are 100 percent effective, for each future airplane design issued a type certificate under the new standards. If the new standards are at least 70 percent effective, then the probability that one or more catastrophic accidents will be prevented for each type certificate is about 50 percent; and if the new standards are 50 percent effective, then there is a 40 percent probability that one or more accidents will be prevented for each type certificate. These potential benefit estimates must be compared to the 63 percent probability that, in the absence of these new standards, one or more catastrophic accidents will occur for each new type certificate that is issued which does not meet these standards.

C. Comparison of Costs and Benefits

The FAA has estimated that the total cost per type certificate for the new liner standard, distributed over a 40 to 50 year period, will be about $46 million. The FAA expects that the majority of future airplane designs receiving new type certificates will be affected by the liner standard only. If one or more catastrophic accidents are prevented, then the loss of at least one airplane valued at $20 million will be prevented, at least 110 fatalities will be prevented, and the cost per fatality avoided will not be greater than $235 thousand. For those relatively few new aircraft designs which may be required to comply with both the amended liner material and the Class D compartment size standards, then the total costs increase to appoximately $102 million per type certificate over a 50 year period. If one or more accidents are prevented, the same benefits as those expected for airplanes subject to only the liner standard will be realized, except that the maximum cost per fatality avoided will increase to approximately $748 thousand.

Based upon a conservative estimate of the historic accident rate, and a sensitivity analysis of the potential effectiveness of the new standards, there is about a 40 to 60 percent probability that one or more catastrophic cargo compartment fire accidents will be prevented for each new type certificate that is issued, and that very reasonable cost-benefit relationships will be achieved. This compares to about a 60 percent probability that one or more catastrophic fire accidents will occur for each noncompliant type certificate that is issued in the absence of these new standards.

II. Regulatory Flexibility Act Determination

A final regulatory flexibility determination was conducted in compliance with the Regulatory Flexibility Act. The conclusion in the initial regulatory evaluation, that the rule will have no direct impact on small entities, is not altered by the present evaluation.

III. International Trade Impact Analysis

The amendment will have little or no impact on trade for both U.S. firms doing business in foreign countries and foreign firms doing business in the U.S. In the U.S., foreign manufacturers will have to meet U.S. requirements, and thus they will gain no competitive advantage. In foreign countries, foreign manufacturers could have some minor cost advantage if the foreign country does not require the improved design standards, but because the cost will be negligible compared to the new airplane cost, there will be essentially no impact.

Conclusion

For the reasons discussed earlier in the preamble, the FAA has determined that this regulation is not considered to be major under Executive Order 12291. The FAA has determined that this action is significant under DOT Regulatory Policies and Procedures (44 FR 11034; February 26, 1979). In addition, it has been determined under the criteria of the Regulatory Flexibility Act that this rule does not have a significant economic effect on a substantial number of small entities, since none would be affected. A regulatory evaluation, including a Regulatory Flexibility Determination and Trade Impact Assessment, has been prepared for this regulation and has been placed in the Rules Docket. A copy of this evaluation may be obtained by contacting the person identified under the caption **"FOR FURTHER INFORMATION CONTACT."**

List of Subjects in 14 CFR Part 25

Air transportation, Aircraft, Aviation safety, Safety.

Adoption of the Amendment

Accordingly, Part 25 of the Federal Aviation Regulations (FAR), 14 CFR Part 25 is amended as follows:

PART 25—AIRWORTHINESS STANDARDS: TRANSPORT CATEGORY AIRPLANES

1. The authority citation for Part 25 continues to read as follows:

Authority: 49 U.S.C. 1344, 1354(a), 1355, 1421, 1423, 1424, 1425, 1428, 1429, 1430; 49 U.S.C. 106(g) (Revised Pub. L. 97–449, January 12, 1983).

2. By amending § 25.853 by revising paragraph (b) to read as follows:

§ 25.853 Compartment interiors.

* * * * *

(b) Floor covering, textiles (including draperies and upholstery), seat cushions, padding, decorative and nondecorative coated fabrics, leather, trays and galley furnishings, electrical conduit, thermal and acoustical insulation and insulation covering, air ducting, joint and edge covering, liners of Class B and E cargo or baggage compartments, floor panels of Class C or D cargo and baggage compartments, insulation blankets, cargo covers, and transparencies, molded and thermoformed parts, air ducting joints, and trim strips (decorative and chafing), that are constructed of materials not covered in paragraph (b–2) of this section, must be self-extinguishing when tested vertically in accordance with the applicable portions of Part I of Appendix F of this Part, or other approved equivalent methods. The average burn length may not exceed 8 inches, and the average flame time after removal of the flame source may not exceed 15 seconds. Drippings from the test specimen may not continue to flame for more than an average of 5 seconds after falling.

* * * * *

3. By amending § 25.855 by revising paragraph (a–1), to read as follows:

§ 25.855 Cargo and baggage compartments.

* * * * *

(a-1) Class B through Class E cargo or baggage compartments, as defined in § 25.857, must have a liner and the liner must be separate from (but may be

attached to) the airplane structure, and must be tested as follows:

(1) Ceiling and sidewall liner panels of Class C and D compartments must meet the test requirements of Part III of Appendix F of this Part or other approved equivalent methods.

(2) Floor panels of all compartments and ceiling and sidewall liner panels of Class B and E compartments must be constructed of materials that meet at least the requirements set forth in § 25.853(b). Also, these liner panels must be tested at a 45 degree angle in accordance with the applicable portions of Part I of Appendix F of this Part or other approved equivalent methods. The flame may not penetrate (pass through) the material during application of the flame or subsequent to its removal. The average flame time after removal of the flame source may not exceed 15 seconds, and the average glow may not exceed 10 seconds.

* * * * *

4. By amending § 25.857 by adding a new paragraph (d)(6) to read as follows:

§ 25.857 Cargo compartment classification.

* * * * *

(d) * * *

(6) The compartment volume does not exceed 1,000 cubic feet.

* * * * *

5. By amending Appendix F by adding a new Part III to read as follows:

Appendix F to Part 25

* * * * *

Part III—Test Method to Determine Flame Penetration Resistance of Cargo Compartment Liners.

(a) *Criteria for Acceptance.*

(1) At least three specimens of cargo compartment sidewall or ceiling liner panels must be tested.

(2) Each specimen tested must simulate the cargo compartment sidewall or ceiling liner panel, including any design features, such as joints, lamp assemblies, etc., the failure of which would affect the capability of the liner to safey contain a fire.

(3) There must be no flame penetration of any specimen within 5 minutes after application of the flame source, and the peak temperature measured at 4 inches above the upper surface of the horizontal test sample must not exceed 400 °F.

(b) *Summary of Method.* This method provides a laboratory test procedure for measuring the capability of cargo compartment lining materials to resist flame penetration with a 2 gallon per hour (GPH) #2 Grade kerosene or equivalent burner fire source. Ceiling and sidewall liner panels may be tested individually provided a baffle is used to simulate the missing panel. Any specimen that passes the test as a ceiling liner panel may be used as a sidewall liner panel.

(c) *Test Specimens.*

(1) The specimen to be tested must measure 16±⅛ inches (406±3 mm) by 24+⅛ inches (610±3 mm).

(2) The specimens must be conditioned at 70 °F.±5 °F. (21°C.±2 °C.) and 55%±5% humidity for at least 24 hours before testing.

(d) *Test Apparatus.* The arrangement of the test apparatus, which is shown in Figure 3 of Part II and Figures 1 through 3 of this Part of Appendix F, must include the components described in this section. Minor details of the apparatus may vary, depending on the model of the burner used.

(1) *Specimen Mounting Stand.* The mounting stand for the test specimens consists of steel angles as shown in Figure 1.

(2) *Test Burner.* The burner to be used in tesing must—

(i) Be a modified gun type.

(ii) Use a suitable nozzle and maintain fuel pressure to yield a 2 GPH fuel flow. For example: an 80 degree nozzle nominally rated at 2.25 GPH and operated at 85 pounds per square inch (PSI) gage to deliver 2.03 GPH.

(iii) Have a 12 inch (305 mm) burner extension installed at the end of the draft tube with an opening 6 inches (152 mm) high and 11 inches (280 mm) wide as shown in Figure 3 of Part II of this Appendix.

(iv) Have a burner fuel pressure regulator that is adjusted to deliver a nominal 2.0 GPH of #2 Grade kerosene or equivalent.

Burner models which have been used successfully in testing are the Lenox Model OB-32, Carlin Model 200 CRD and Park Model DPL. The basic burner is described in FAA Powerplant Engineering Report No. 3A, Standard Fire Test Apparatus and Procedure for Flexible Hose Assemblies, dated March 1978; however, the test settings specified in this appendix differ in some instances from those specified in the report.

(3) *Calorimeter.*

(i) The calorimeter to be used in testing must be a total heat flux Foil Type Gardon Gage of an appropriate range (approximately 0 to 15.0 British thermal unit (BTU) per ft.^{2} sec., 0–17.0 watts/cm^2). The calorimeter must be mounted in a 6 inch by 12 inch (152 by 305 mm) by ¾ inch (19 mm) thick insulating block which is attached to a steel angle bracket for placement in the test stand during burner calibration as shown in Figure 2 of this Part of this Appendix.

(ii) The insulating block must be monitored for deterioration and the mounting shimmed as necessary to ensure that the calorimeter face is parallel to the exit plane of the test burner cone.

(4) *Thermocouples.* The seven thermocouples to be used for testing must be 1/16 inch ceramic sheathed, type K, grounded thermocouples with a nominal 30 American wire gage (AWG) size conductor. The seven thermocouples must be attached to a steel angle bracket to form a thermocouple rake for placement in the test stand during burner calibration as shown in Figure 3 of this Part of this Appendix.

(5) *Apparatus Arrangement.* The test burner must be mounted on a suitable stand to position the exit of the burner cone a distance of 8 inches from the ceiling liner panel and 2 inches from the sidewall liner panel. The burner stand should have the capability of allowing the burner to be swung away from the test specimen during warm-up periods.

(6) *Instrumentation.* A recording potentiometer or other suitable instrument with an appropriate range must be used to measure and record the outputs of the calorimeter and the thermocouples.

(7) *Timing Device.* A stopwatch or other device must be used to measure the time of flame application and the time of flame penetration, if it occurs.

(e) *Preparation of Apparatus.* Before calibration, all equipment must be turned on and allowed to stabilize, and the burner fuel flow must be adjusted as specified in paragraph (d)(2).

(f) *Calibration.* To ensure the proper thermal output of the burner the following test must be made:

(1) Remove the burner extension from the end of the draft tube. Turn on the blower portion of the burner without turning the fuel or igniters on. Measure the air velocity using a hot wire anemometer in the center of the draft tube across the face of the opening. Adjust the damper such that the air velocity is in the range of 1550 to 1800 ft./min. If tabs are being used at the exit of the draft tube, they must be removed prior to this measurement. Reinstall the draft tube extension cone.

(2) Place the calorimeter on the test stand as shown in Figure 2 at a distance of 8 inches (203 mm) from the exit of the burner cone to simulate the position of the horizontal test specimen.

(3) Turn on the burner, allow it to run for 2 minutes for warm-up, and adjust the damper to produce a calorimeter reading of 8.0±0.5 BTU per ft.^{2} sec. (9.1±0.6 Watts/cm^2).

(4) Replace the calorimeter with the thermocouple rake (see Figure 3).

(5) Turn on the burner and ensure that each of the seven thermocouples reads 1700 °F. ±100 °F. (927 °C. ±38 °C.) to ensure steady state conditions have been achieved. If the temperature is out of this range, repeat steps 2 through 5 until proper readings are obtained.

(6) Turn off the burner and remove the thermocouple rake.

(7) Repeat (1) to ensure that the burner is in the correct range.

(g) *Test Procedure.*

(1) Mount a thermocouple of the same type as that used for calibration at a distance of 4 inches (102 mm) above the horizontal (ceiling) test specimen. The thermocouple should be centered over the burner cone.

(2) Mount the test specimen on the test stand shown in Figure 1 in either the horizontal or vertical position. Mount the insulating material in the other position.

(3) Position the burner so that flames will not impinge on the specimen, turn the burner on, and allow it to run for 2 minutes. Rotate the burner to apply the flame to the specimen and simultaneously start the timing device.

(4) Expose the test specimen tto the flame for 5 minutes and then turn off the burner. The test may be terminated earlier if flame penetrations observed.

(5) When testing ceiling liner panels, record the peak temperature measured 4 inches above the sample.

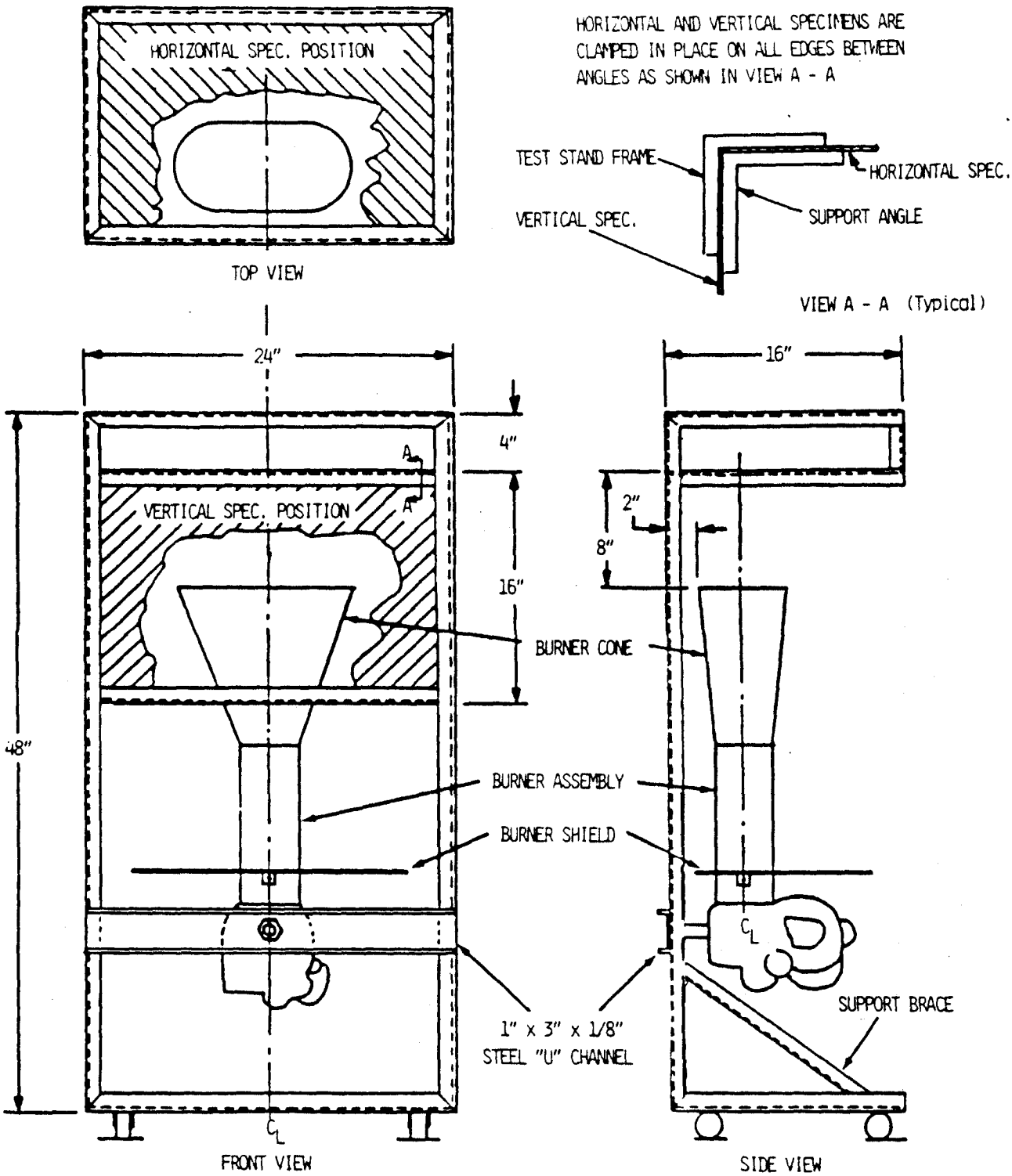

TEST STAND IS CONSTRUCTED WITH 1" x 1" x 1/8" STEEL ANGLES, ALL JOINTS WELDED
SUPPORT ANGLES ARE 1" x 1" x 1/8" CUT TO FIT

FIGURE 1. TEST APPARATUS FOR HORIZONTAL AND VERTICAL MOUNTING

(6) Record the time at which flame penetration occurs if applicable.

(h) *Test Report.* The test report must include the following:

(1) A complete description of the materials tested including type, manufacturer, thickness, and other appropriate data.

(2) Observations of the behavior of the test specimens during flame exposure such as delamination, resin ignition, smoke, ect., including the time of such occurrence.

(3) The time at which flame penetration occurs, if applicable, for each of the three specimens tested.

(4) Panel orientation (ceiling or sidewall).

Donald D. Engen,

Administrator.

BILLING CODE 4910-13-M

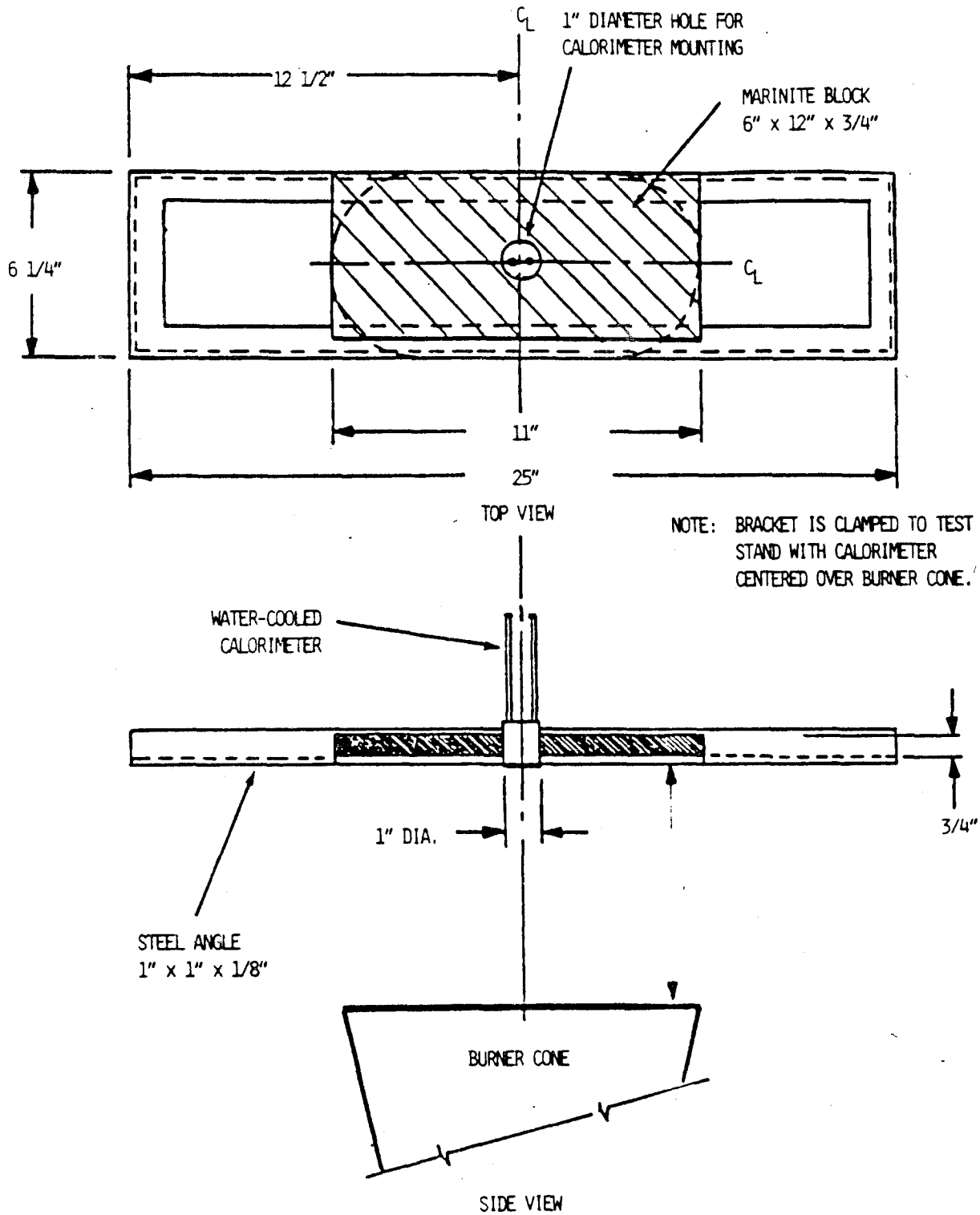

FIGURE 2. CALORIMETER BRACKET

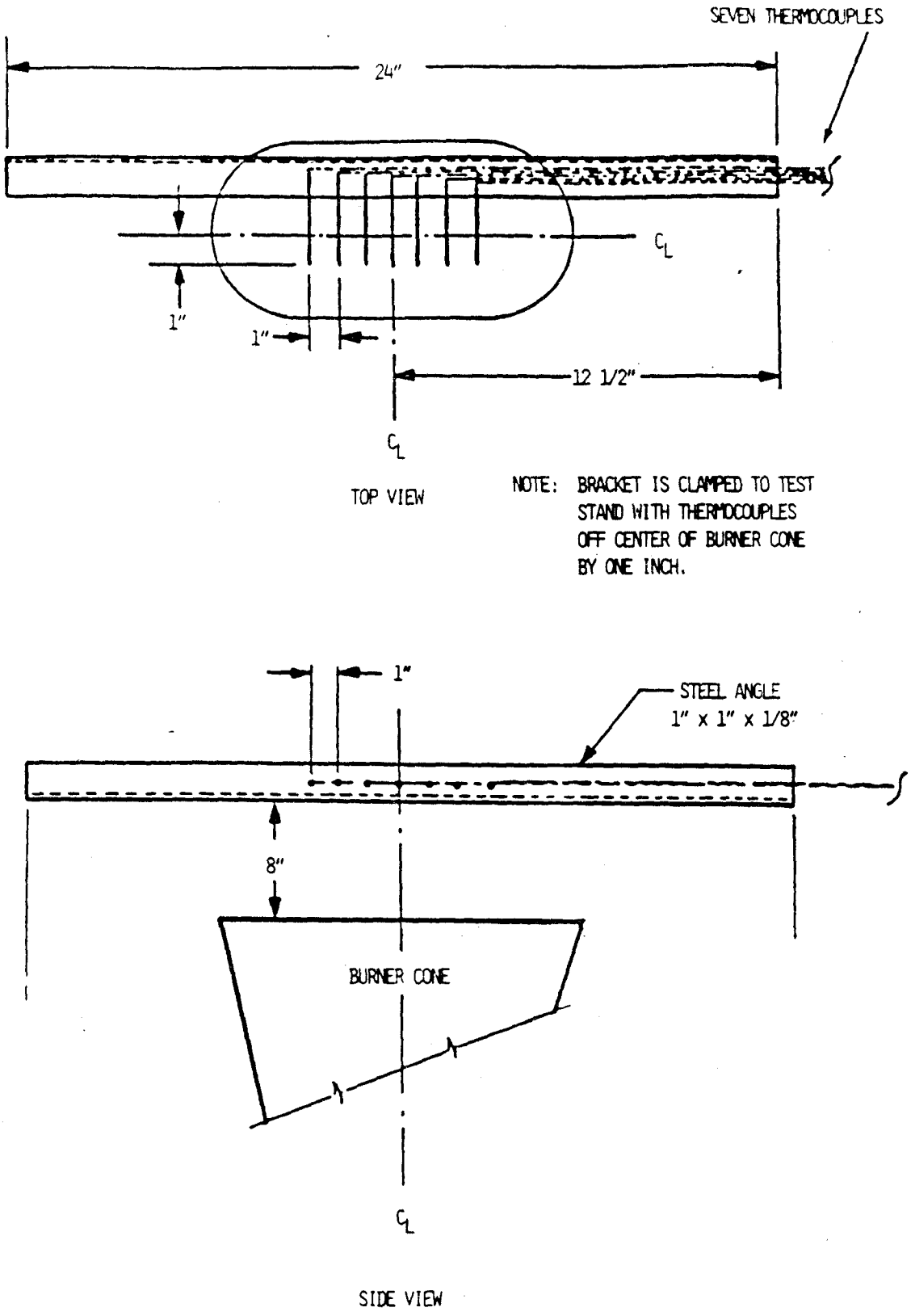

FIGURE 3. THERMOCOUPLE RAKE BRACKET

[FR Doc. 86-11048 Filed 5-15-86; 8:45 am]
BILLING CODE 4910-13-C